back

installation and servicing

Buccaneer GTE

Your Ideal installation and servicing guide

GTE 4, GTE 5, GTE 6 & Combination Boilers

When replacing any part on this appliance, use only spare parts that you can be assured conform to the safety and performance specification that we require. Do not use reconditioned or copy parts that have not been clearly authorised by Ideal Boilers.

Ideal BOILERS

ENGINEERED FOR PEACE OF MIND

GENERAL

Table 1 Performance Data

Boiler		GTE4	GTE5	GTE6
Number of Sections		4	5	6
Maximum	kW	27	33	39
Heat Ouptut	Btu/hx10³	92.1	112.6	133.1
Minimum	kW	21	27	32
Heat Output	Btu/hx10³	71.7	92.1	109.2
Hydraulic	mbar	5.3	7.9	10.9
Resistance at 11k	in w.g.	2.1	3.2	4.4
Hydraulic	mbar	1.6	2.4	3.3
Resistance at 20k	in w.g.	0.6	1.0	1.3
Combustion Chamber	mbar	0.23	0.23	0.22
Resistance (at zero draught)	in w.g.	0.01	0.01	0.01
Minimum Draught at Smokehood	mbar	0.12	0.12	0.11
Outlet (for max. output)	in w.g.	0.048	0.048	0.044

Oil

Maximum Gross	l/h	3.11	3.80	4.48
Oil Rate	gal/h	0.683	0.836	0.986
Maximum Flue	m³/s	0.017	0.022	0.025
Gas Volume at 12% CO_2	ft³/min	36	47	53
Flue Gas CO_2 / Temperature	% / °C	12 / 180	12 / 190	12 / 190

Part Load Efficiency (Gross)	%	89.5	88.5	87.8
*Seasonal Efficiency (SEDBUK)		[85.7]% Band C	[85.7]% Band C	[85.7]% Band C

Gas

Maximum	m³/h	3.10	3.79	4.47
Gas Rate	ft³/h	109.4	133.9	158.0
Maximum Flue	m³/s	0.019	0.026	0.027
Gas Volume at 9% CO_2	ft³/min	40	49	57
Flue Gas CO_2 / Temperature	% / °C	9 / 180	9 / 190	9 / 190

Part Load Efficiency (Gross)	%	86.0	85.0	84.4
*Seasonal Efficiency (SEDBUK)		[79.9]% Band D	[79.9]% Band D	[79.9]% Band D

Table 2 General Data

Flow Connection		R 1 ¼"	R 1 ¼"	R 1 ¼"
Return Connection		R 1 ¼"	R 1 ¼"	R 1 ¼"
Maximum Operating Pressure	bar	4	4	4
Boiler Thermostat Setting	C	30 - 90	30 - 90	30 - 90
Safety Thermostat Setting	C	110	110	110
Nominal Flue	mm	125	125	153
Diameter	in.	5	5	6
Boiler Water	l	24.5	30	35.5
Content	gal	5.4	6.6	7.8
Boiler DRY Weight	kg	162	187	213
less Burner Unit	lb	357	412	169

** The value is used in the UK Government's Standard Assessment Procedure (SAP) for energy rating of dwellings. The test data from which it has been calculated have been certified by a notified body.*

Note.

Fuel rates and flue gas data relate to maximum output ratings. Gas firing data relates to the use of NATURAL GAS ONLY.

Details for the use of LPG are available on request from Caradon Ideal Ltd.

Natural gas consumption is calculated using a calorific value of 38.7MJ/m³ (1038Btu/ft³) gross or 34.9MJ/m³ (935Btu/ft³) nett at 15°C and 1013.25mbar.

HEALTH & SAFETY DOCUMENT NO. 635

The electricity at work regulations, 1989. The manufacturer's notes must NOT be taken, in any way, as overriding statutory obligations.

IMPORTANT. These appliances are CE certified for safety and performance. It is, therefore, important that no external control devices, e.g. flue dampers, economisers etc., are directly connected to these appliances unless covered by these Installation and Servicing Instructions or as otherwise recommended by **Caradon Ideal Limited** in writing. If in doubt please enquire.

Any direct connection of a control device not approved by **Caradon Ideal Limited** could invalidate the certification and the normal appliance warranty. It could also infringe the Gas Safety Regulations and the above regulations.

CONTENTS

Assembly. 11-18
Boiler Clearances. 6
Burner Connection. 10
Commissioning and Testing. ..... 25 & 26
Electrical Connections. 19
Electrical Supply. 5
Flue Installation. 5
Fluing. 9
Gas Safety Regulations 4
Gas Supply. 5
Hydraulic Resistance. 2
Initial Lighting. 43
Introduction. 3
Installation. 9
Option Kits. 3
Performance Data. 2
Servicing. 27
Ventilation. 7
Water Circulation. 5
Water Connections. 7
Water System Requirements. 8
Water Treatment. 5
Wiring Diagrams. 20-22

COMBINATION MODELS ONLY

Assembly. 32-36
Boiler Clearances. 30
Introduction. 29
Servicing. 37
Start Up. 36
Technical Data. ..... 29 & 30
Water Connections. 31

Buccaneer GTE

Gas and Fuel Oil

PI No. 0049 BM 3528

Destination Countries: GB, IE

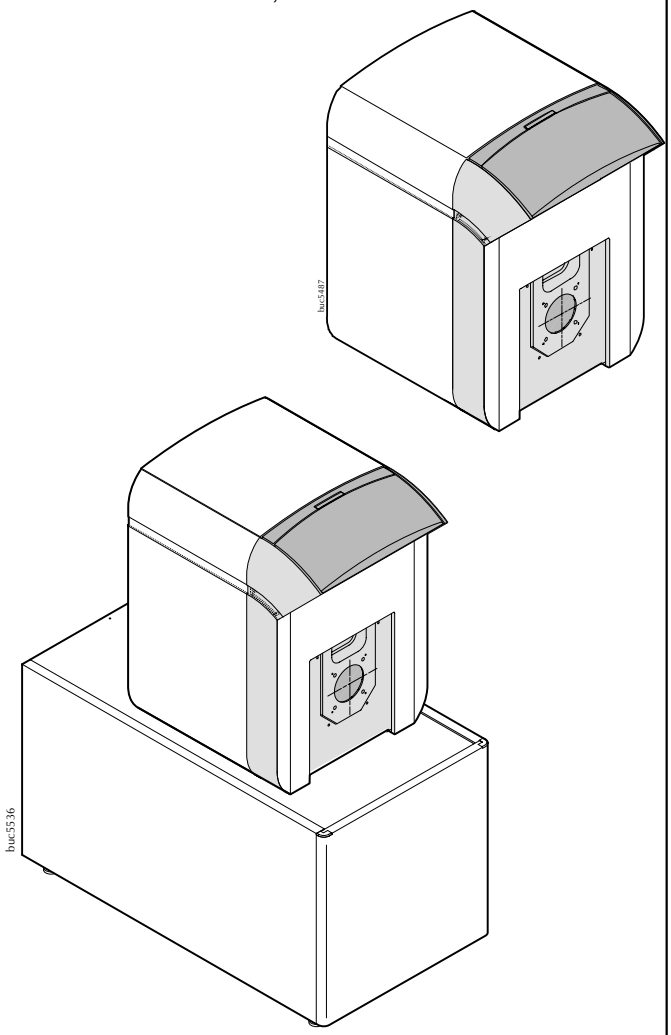

INTRODUCTION

The Buccaneer GTE boilers are fully automatically controlled floor standing boilers designed for connecting to a flue pipe and require a separate automatic fuel oil or gas burner.

The boilers have a maximum heat output of 27-39kW.

The boilers are suitable for: combined indirect pumped domestic hot water and central heating systems; independent indirect pumped domestic hot water or central heating systems.

Fully pumped systems may be open vented or sealed.

The boilers are NOT suitable for:

1. Gravity DHW systems.
2. Gravity heating systems.
3. Direct domestic hot water supply.

Option

DHW Remote Sensor Kit (FM 45)

CAUTION. To avoid the possibility of injury during the installation, servicing or cleaning of this appliance, care should be taken when handling edges of sheet steel components.

SAFETY

Current Gas Safety (Installation and Use) Regulations or rules in force.

It is law that all gas appliances are installed and serviced by a CORGI registered installer in accordance with the regulations below. Failure to install appliances correctly could lead to prosecution. It is in your own interest, and that of safety, to ensure the law is complied with.

The following must be conformed with:

Current Building Regulations and Clean Air Act

Water Authority Regulations

Local Authority Regulations and Regional Bylaws

Gas Safety Regulations

Any special regional requirements of local Electricity and Gas undertaking.

Fire Service and Insurance Company requirements.

In the interests of safety, a competent installer should be employed to effect the installation of the appliance. Manufacturer's notes must NOT, in any way, be taken as over riding statutory obligations.

The installation of the boiler MUST also be in accordance with the latest I.E.E. (BS7671) Wiring Regulations, local buildings regulations, bye-laws of the local water authority, the building regulations and the Building Standards (Scotland) and any relevant requirements of the local authority.

Detailed recommendations are contained in the following Codes of Practice:

BS 799 Pt4 & 7	Oil burning equipment.
BS 799 Pt5	Oil storage tanks.
BS 5410 Pt1	Installation for space heating and hot water supply.
BS 5440	Installation and maintenance of flues and ventilation for gas appliances of rated input not exceeding 70kW net (1st, 2nd and 3rd family gases).
Part 1	Specification for installation of flues
Part 2	Specification for installation and maintenance of ventilation for gas appliances.
BS 5449	Forced circulation hot water central heating systems for domestic premises. Note: only up to 45kW.
BS 5482 Pt1	Domestic butane and propane gas burning installations.
BS 5546	Installation of gas hot water supplies for domestic purposes.
BS 5854	Flues and flue structures in buildings.
BS 5885 Pt2	Gas burners - with inputs up to 60kW.
BS 6798	Installation of gas fired hot water boilers of rated input not exceeding 60kW.
BS 6891	Installation of low pressure gas pipework of up to 28mm (R1) in domestic premises (2nd family gas).
EN 303.1	Heating boilers with forced draught burners. General requirements.
EN 303.2	Heating boilers with forced draught burners with atomizing oil burners.
EN 304	Test code for heating boilers for atomizing oil burners.
73/23 EEC	Low voltage directive. (Relevant standard is EN60335.1)
89336 EEC	Electromagnetic Compatibility Directive. (Relevant standards are EN50081.1, EN50082.1 and EN55014.)
90396 EEC	Gas Devices Directive. (Relevant standards are EN303.1, EN303.2 and EN304.)
92/42 EEC	HH Efficiency Directive.
IGE/UP1	Soundness testing and purging of industrial and commercial gas installation.
IGE/UP2	Gas installation pipework, boosters and compressors on industrial and commercial premises.
IGE/UP10	Installation of gas appliances in industrial and commercial premises.
British Gas IM11	Flues for commercial and industrial gas fired boilers and air heaters.

SAFE HANDLING OF SUBSTANCES

Care should be taken when handling the boiler insulation panels, which can cause irritation to the skin. No asbestos, mercury or CFCs are included in any part of the boiler or its manufacture.

Assembly and Installation Instructions for Ideal Buccaneer GTE heating boilers should be read in conjunction with the general technical data tables enclosed and any other technical publication supplied with the burner.

NOTE TO THE INSTALLER: LEAVE THESE INSTRUCTIONS ADJACENT TO THE BOILER.

GAS SUPPLY

The local gas supplier should be consulted, at the installation planning stage, in order to establish the availability of an adequate supply of gas. An existing service pipe must NOT be used without prior consultation with the local gas supplier.

A gas meter can only be connected by the local gas supplier or by a registered CORGI engineer.

An existing meter should be checked, preferably by the gas supplier, to ensure that the meter is adequate to deal with the rate of gas supply required. A minimum working gas pressure of 17.5mbar MUST be available at the boiler inlet for Natural gas and 37mbar for Propane.

Do not use pipes of smaller size than the burner inlet gas connection.

The complete installation MUST be tested for gas soundness and purged in accordance with the appropriate standards listed on page 4.

FLUE INSTALLATION

IMPORTANT
It is the responsibility of the installer to ensure, in practice, that products of combustion discharging from the terminal cannot re-enter the building or any other adjacent building through ventilators, windows, doors, other sources of natural air infiltration, or forced ventilation / air conditioning.

If this should occur the appliance MUST be turned OFF, labelled as 'unsafe' and corrective action taken.

The flue must be installed in accordance with the appropriate standards listed on page 4.

WATER CIRCULATION SYSTEM

The system pump MUST be connected to the boiler.

The boiler must NOT be used for direct hot water supply. The hot water storage cylinder MUST be of the indirect type.

Single feed, indirect cylinders are not recommended and MUST NOT be used on sealed systems.

The appliances are NOT suitable for gravity central heating nor are they suitable for the provision of gravity domestic hot water.

The hot water cylinder and ancillary pipework, not forming part of the useful heating surface, should be lagged to prevent heat loss and any possible freezing - particularly where pipes run through roof spaces and ventilated underfloor spaces.

The boiler must be vented.

Draining taps MUST be located in accessible positions, which permit the draining of the whole system - including the boiler and hot water storage vessel. They should be at least 1/2" BSP nominal size and be in accordance with BS. 2879.

The central heating system should be in accordance with the relevant standards listed on page 4.

Due to the compact nature of the boiler the heat stored within the castings at the point of shutdown of the burner must be dissipated in order to avoid overheating. In order to allow pump operation after burner shutdown the boiler control box incorporates a pump overrun facility. In order to make use of this, the pump must be supplied from the terminals inside the boiler. Note: for pumps requiring greater than 1.0amp current, they must be connected via a relay.

WATER TREATMENT FOR HOT WATER AND HEATING BOILERS

There is a basic need to treat the water contained in all heating and indirect water systems, particularly open vented systems. It is assumed, incorrectly, that because boilers are operating in conjunction with what is apparently a closed circuit an open vented system will not, under normal circumstances, allow damage or loss of efficiency due to hardness salts and corrosion once the initial charge of water has been heated up a few times.

1mm of lime reduces the heat transfer from metal to water by 10%.

In practice the deposition of these salts is liable to cause noises from the boiler body or even premature boiler failure. Corrosion and the formation of black iron oxide sludge will ultimately result in premature radiator failure.

Open vented systems are not completely sealed from the atmosphere if proper venting and expansion of system water is to be achieved. The same tank is used to fill the system with water and it is through the cold feed pipe that system water expands into the tank when the boiler passes heat into the system.

Conversely, when the system cools, water previously expelled is drawn back from the tank into the system together with a quantity of dissolved oxygen.

Even if leakage from the heating and hot water system is eliminated there will be evaporation losses from the surface of the tank which, depending upon ambient temperature, may be high enough to evaporate a large portion of the system water capacity over a full heating season.

There will always be corrosion within a heating or hot water system to a greater or lesser degree, irrespective of water characteristics, unless the initial fill water from the mains is treated. Even the water in closed systems will promote corrosion unless treated. For the reason stated, **Caradon Ideal Limited** strongly recommend that when necessary the systems is thoroughly cleaned, prior to the use of stable inhibitor, which does not require continual topping up to combat the effects of hardness salts and corrosion on the heat exchangers of the boiler and associated systems.

Caradon Ideal Limited advise contact directly with specialists on water treatment such as:

Betz Dearborn Ltd Widnes, Cheshire, Tel: 0151 424 5351	or	Fernox Manufacturing Co. Ltd. Tandem House, Marlowe Way, Croydon, Surrey, CRO 4XS Tel: 0870 601 5000

ELECTRICAL SUPPLY

WARNING This appliance must be earthed.
A 230V - 50Hz mains supply is required, fused at 5amps.

Wiring external to the appliance MUST be in accordance with the current I.E.E. (BS7671) Wiring Regulations and any local regulations which apply.

The point of connection to the mains should be readily accessible and adjacent to the boiler.

LOCATION OF THE BOILER

The boiler must stand on a non-combustible floor (i.e. concrete or brick) which must be flat, level and of a suitable load bearing capacity to support the weight of the boiler (when filled with water) and any ancillary equipment.

If the boiler is mounted on a plinth then the dimensions must exceed the plan area of the boiler by at least 75mm on each side.

The boiler must not be fitted outside.

1 BOILER DIMENSIONS

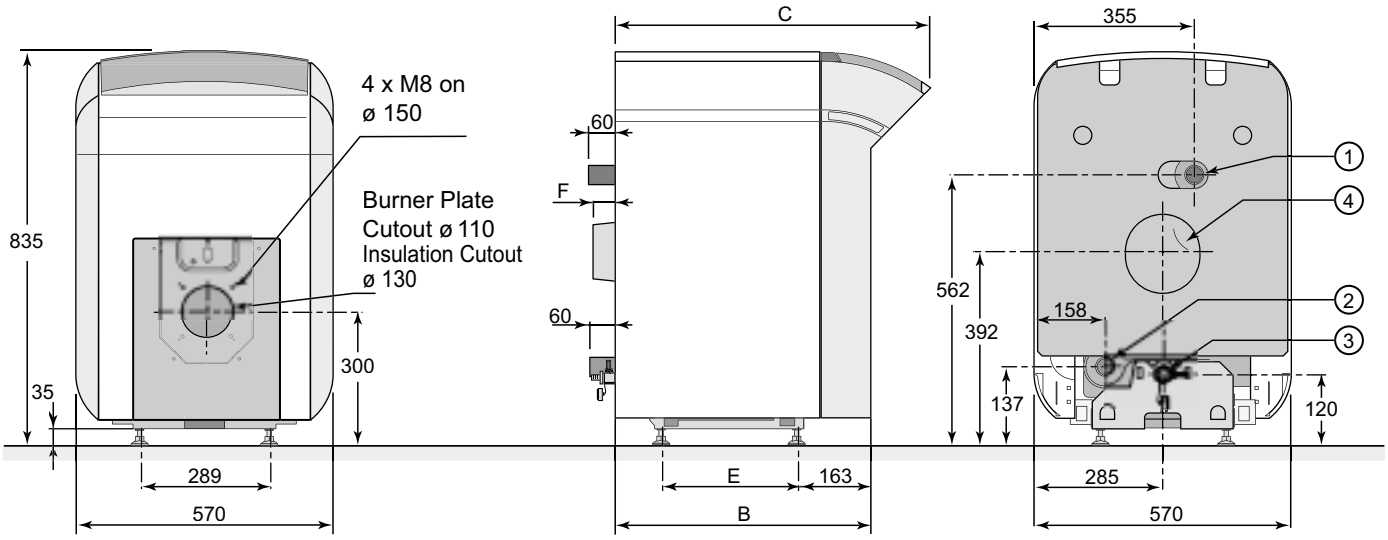

	B	C	ø D	E	F
GT 4	692	812	125	427	50
GT 5	819	939	125	554	50
GT 6	946	1066	153	681	99

1 Heating supply R 1 1/4
2 Heating return R 1 1/4
3 Drain cock
(connection for pipe ø int. 14 mm)
4 Flue spigot OD, ø D

2 BOILER CLEARANCES

The minimum dimensions indicated on the following drawing must be respected to ensure good access around the boiler.

Note.

To allow the inlet of the combustion air, the boiler room must be adequately ventilated, the section and the location of which must comply with local recommendations.

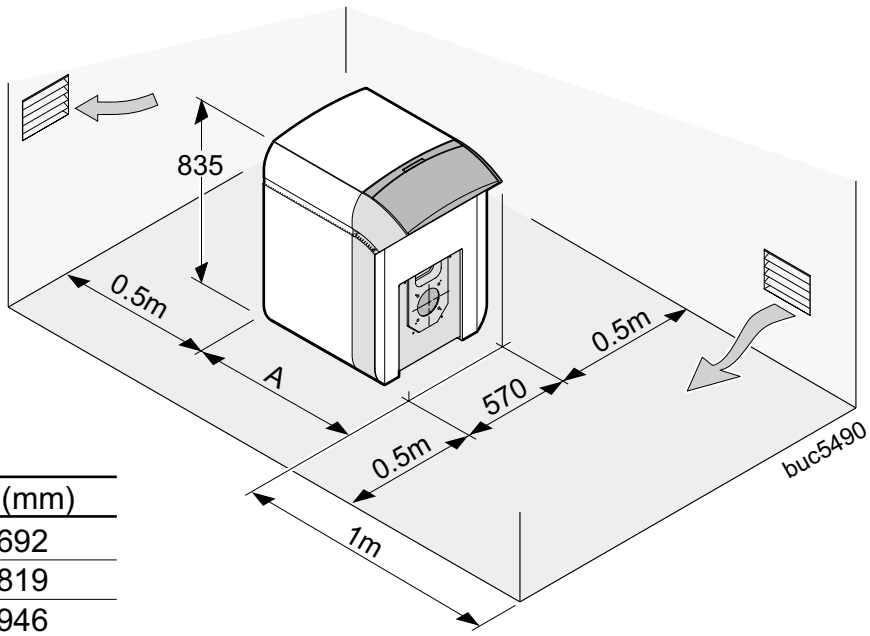

Boiler	A (mm)
GTE 4	692
GTE 5	819
GTE 6	946

3 VENTILATION

The ventilation requirements in the gas fired boiler standard are also valid for oil fired boilers of the same heat input.

The ventilation requirements of these boilers is dependant on the type of flue system used, and their heat input. All vents must be permanent with no means of closing, and positioned to avoid accidental obstruction by blocking or flooding.

Detail reference should be made to BS 5440 Pt. 2. The following notes are for general guidance only:

If installed in a room or internal space then a permanent air vent is required. The sizes for vents directly communicating with outside air shall have a free area of 5cm^2 per kW of boiler rated input in excess of 7kW.

If installed in a compartment, then permanent air vents are required at high and low level. These vents may communicate direct to outside air, or to a room/internal space. If to room/internal space, it must itself be adequately ventilated as above.

Minimum vent free area (cm^2) per kW of boiler rated input positioned at:	Open-flued	
	To room or internal space	Direct to outside air
High Level	10	5
Low Level	20	10

Note.

Remember that boilers installed in or close to rooms in which the atmosphere is polluted with chlorine or fluorine compounds may be subject to high corrosion.

For example: hairdressing salons, industrial premises (solvents), cooling equipment etc.

Boiler installed in such locations shall not be covered by the warranty.

4 HYDRAULIC CONNECTION

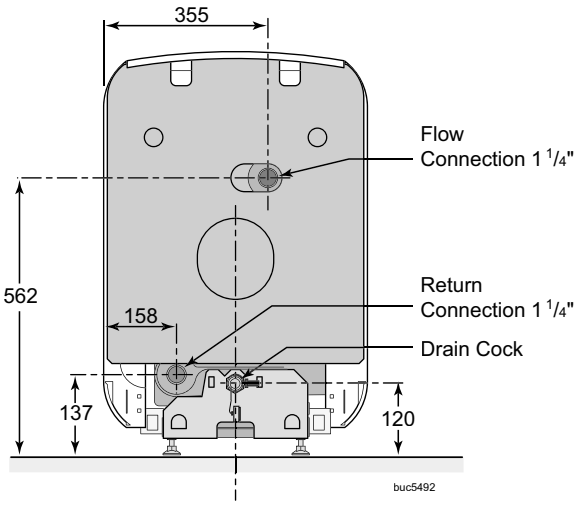

FILLING THE SYSTEM

Filling shall be performed with a low flow rate from a low point in the boiler room in order to ensure that all the air in the boiler is bled from the high point of the system.

Always stop the pump before filling.

IMPORTANT. Instructions for starting up the boiler for the first time after the system is fully or partly drained:

If all the air is not bled naturally to an expansion vessel which opens out onto the air, the system must include manual bleeder valves, in addition to automatic bleeder valves with the capability to bleed the system by themselves when it is operating. The manual bleeder valves are used to bleed all the high points of the system and to make sure that the filled system is free of air before the burner is turned on.

General

Recommendations relating to the water system are contained in BS. 5449 and BS. 6880.

5 OPEN VENTED SYSTEM REQUIREMENTS

Detail reference should be made to the appropriate standards listed on page 4.

The information and guidance given below is not intended to override any requirements of the above publications or the requirements of the local authority, gas or water undertakings.

The vertical distance between the pump and feed/expansion cistern MUST comply with the pump manufacturer's minimum requirements, to avoid cavitation. Should these conditions not apply either lower the pump position or raise the cistern above the minimum requirement specified by **Caradon Ideal Limited**. The isolation valves should be fitted as close to the pump as possible.

The boiler is fitted with an automatic air vent, located in the left top side of the interior. This air vent must never be shut off, as this could result in dry firing of the boiler and subsequent damage to the heat exchanger.

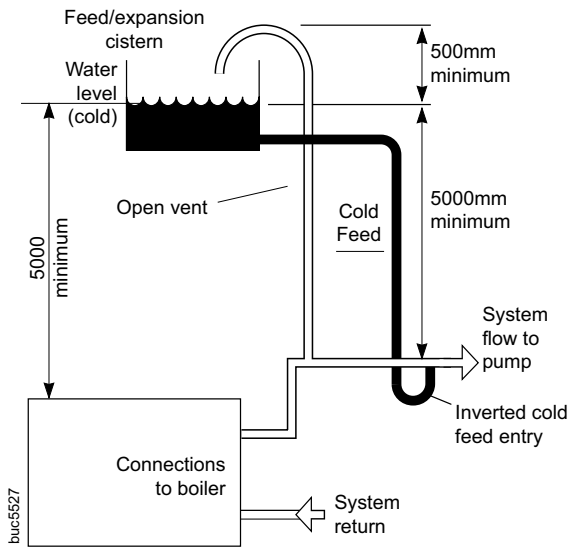

6 SEALED SYSTEM REQUIREMENTS

Note. *The method of filling, refilling, topping up or flushing sealed primary hot water circuit from the mains via a temporary hose connection is only allowed if acceptable to the local water authority.*

1. General

a. Detail reference should be made to the appropriate standards listed on page 4. The information and guidance given below is not intended to override any requirements of these publications or the requirements of the local authority, gas or water undertakings.

b. The installation should be capable of working with flow temperatures of up to 90°C and a temperature differential of up to 20°C.

c. All components of the system, including the heat exchanger of the indirect cylinder, must be suitable for a working pressure of 4bar (60lbf/in^2) and temperature of 110°C. Care should be taken in making all connections so that the risk of leakage is minimised.

d. The boiler is fitted with an automatic air vent, located in the left top side of the interior. This air vent must never be shut off, as this could result in dry firing of the boiler and subsequent damage to the heat exchanger.

2. Safety Valve

A spring loaded safety valve complying with the relevant requirements of BS. 6759 Pt. 1 must be fitted in the flow pipe as close to the boiler as possible and with no intervening valve or restriction. The valve should have the following features:

a. A non-adjustable preset lift pressure not exceeding 4bar (60lbf/in^2).

b. A manual testing device.

c. Provision for connection of a discharge pipe. The valve or discharge pipe should be positioned so that the discharge of water or steam is visible, but will not cause hazard to user or plant.

3. Pressure Gauge

A pressure gauge covering at least the range 0-4bar must be fitted to the system. The gauge should be easily seen from the filling point and should preferably be connected at the same point as the expansion vessel.

4. Expansion Vessel

Expansion vessels used must comply with BS. 4814. Connection to the system must not incorporate an isolating valve.

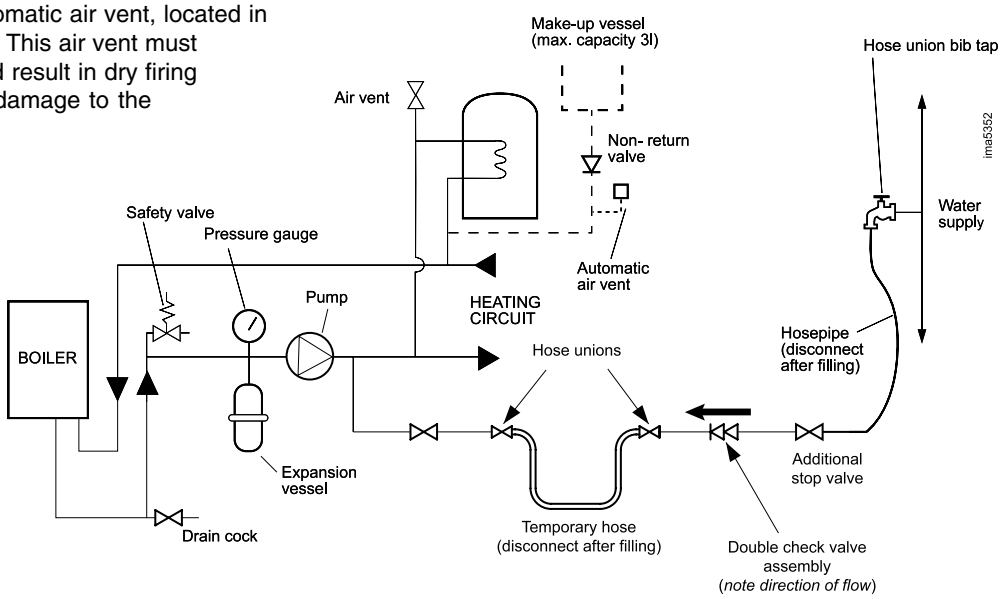

7 FLUING

According to the output, the difference between the temperature of the flue gas and the ambient temperature can be as low as 160ºC. The installer will have to respect all of the usual precautions (dilution - piping - T for removal of condensation) in order to prevent deterioration of the chimney.

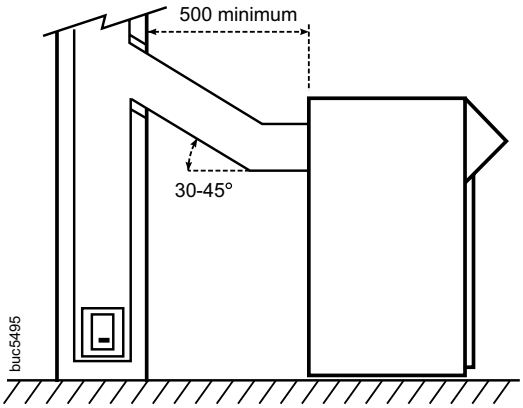

FLUE SIZE

Refer to applicable regulations while determining the size and height of the flue. Please note that GTE boilers have pressurised and sealed combination chambers and that the pressure at the outlet must not exceed 0 mbar.

Detailed recommendations relating to the design of flues for GAS fired appliances are quoted in BS. 6644 and British Gas Publication No. IM11, whilst BS. 5410 Pt. 1 similarly applies to OIL fired boilers.

The table below contains the minimum dimensions of the flue required for each boiler model in order to ensure sufficient draught at the outlet.

However, care must be taken to comply with any applicable national or local regulations.

Boiler	Power	Required Draught	Mass Flow of Flue Gases kg/s		Flue Gas Temperature (1) (2)	Chimney: Minimum Recommended Dimensions	
	kW	mbar	Fuel Oil 12% CO_2	Natural Gas 9% CO_2	ºC	Ø min mm	Height m
GTE 4	21-27	0.12	0.014	0.014	< 180	125	6.5
GTE 5	27-33	0.12	0.017	0.017	< 190	125	7
GTE 6	33-39	0.11	0.020	0.020	< 190	153	7

(1) : at boiler high power
(2) : Boiler temperature: 80ºC (ambient temperature : 20ºC)

8 DIMENSIONAL INFORMATION REQUIRED FOR THE FLUE CONNECTION

Connection

The connection must be made in a competent manner with airtight pipe in a material that is resistant to hot gases from the combustion and possible acid condensation. This pipe must be as short as possible, be removable and without any sudden change in its section.

The diameter must always be at least equal to that of the boiler outlet.

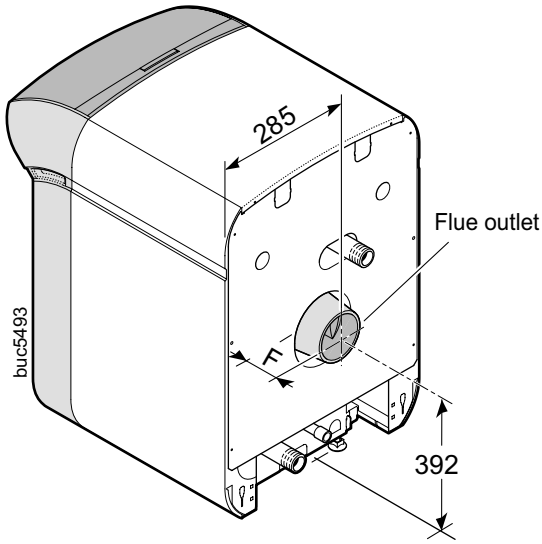

Boiler	Dimension F
GTE 4	50
GTE 5	50
GTE 6	99

FLUE OUTLET

9 BURNER CONNECTION

Gas Supply

The gas supply MUST be sized in accordance with British Gas recommendations.

The Local Gas Authority should be contacted, at a stage prior to actual installation, for any advice or information required.

Details and advice, relating to the use of L.P.G. for firing the BUCCANEER GTE range of heating boilers, are available on request to Caradon Ideal Limited.

Oil Storage Tank

The oil storage tank, oil supply pipe and connections to the burner unit MUST comply with the requirements of BS. 799.

The installation should conform to the recognised standards of good practice in the trade and comply with the relevant Codes of Practice, building Regulations and Local Authority, Fire and Insurance requirements.

Piercing Ø of the burner door

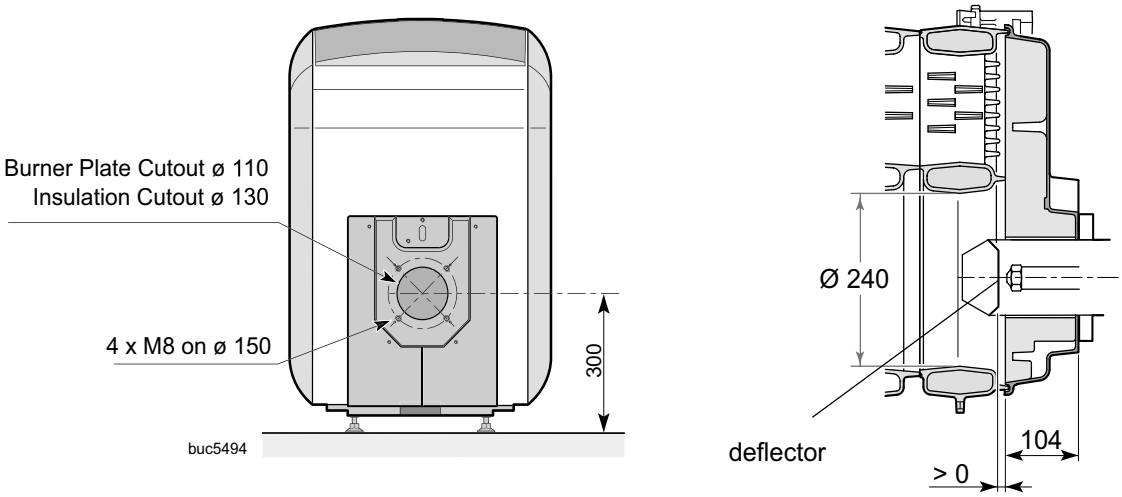

IMPORTANT. The burner head deflector must go past the door insulation as shown opposite.

Connection, adjustment, start-up and maintenance. (Refer to the instructions delivered with the burner)

10 PACKAGING

The following table shows the box numbers included with the boiler to be installed.

Boiler	GTE 4	GTE 5	GTE 6	
Boiler body	FM 2	FM 3	FM 4	
Jacket + insulation	FM 11	FM 12	FM 13	
Control panel	FM 15	FM 15	FM 15	

buc5496

The assembly of any options delivered with the boiler is described in the instructions accompanying the options.
A DHW Sensor Kit (FM 45) is available for use with the Buccaneer GTE range.

11 BOILER BODY PREPARATION

Put a protective piece of cardboard on the floor in front of the boiler body. Take the body off the pallet and put it down vertically on the burner door.

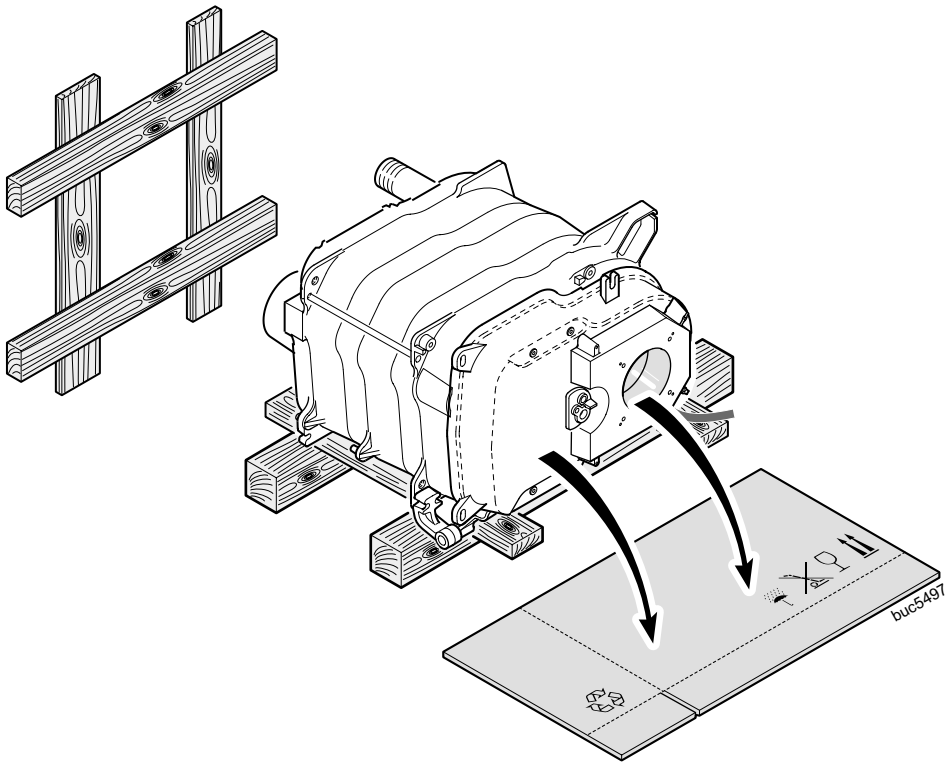

12 INSTALLING THE BASE AND DRAIN COCK

1. Unscrew the ½" plastic plug on the rear section.
2. Attach the base onto the feet of the boiler.
3. Clip the base onto the rear section.
4. Screw in the drain cock supplied in the screw bag making the joint water tight using hemp or sealing paste.
5. Put the boiler body back on its feet.

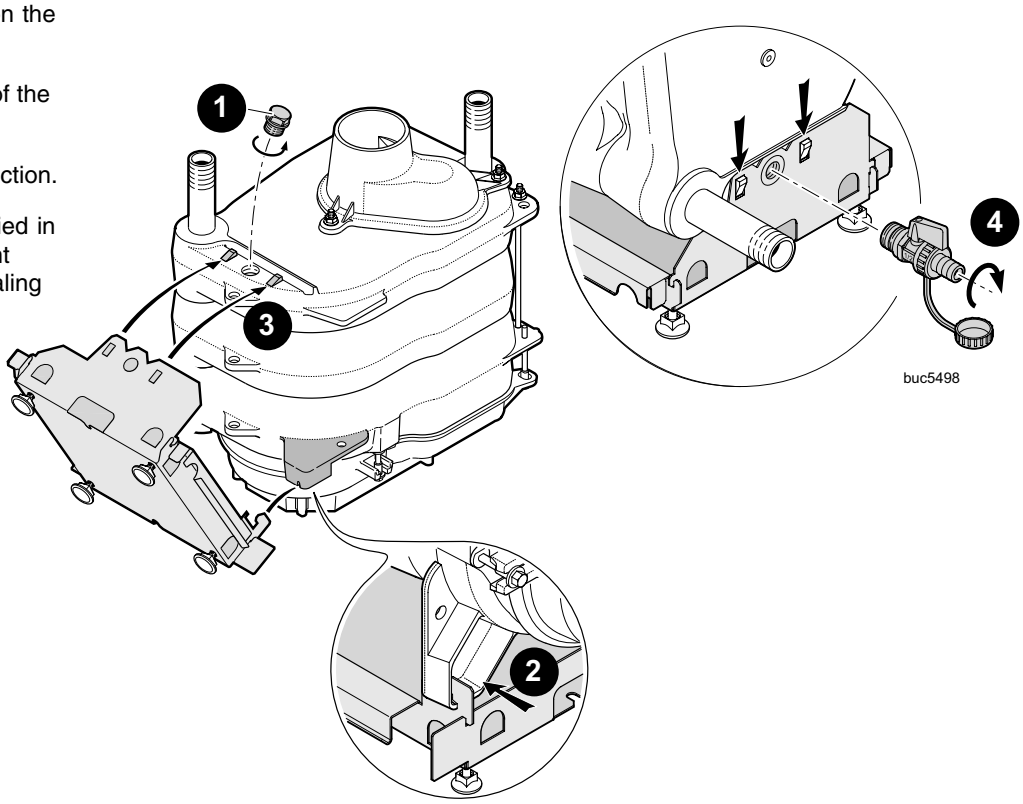

13 REVERSE THE DIRECTION OF OPENING OF THE BURNER DOOR IF NECESSARY (OPENING AT LEFT)

When the burner leaves the factory, the burner door opens towards the right. Perform operations in Frames 13 and Frame 14 to open the burner door towards the left (if absolutely necessary).

1. Loosen the 2 top and bottom nuts.
2. Remove the lower and upper hinges.

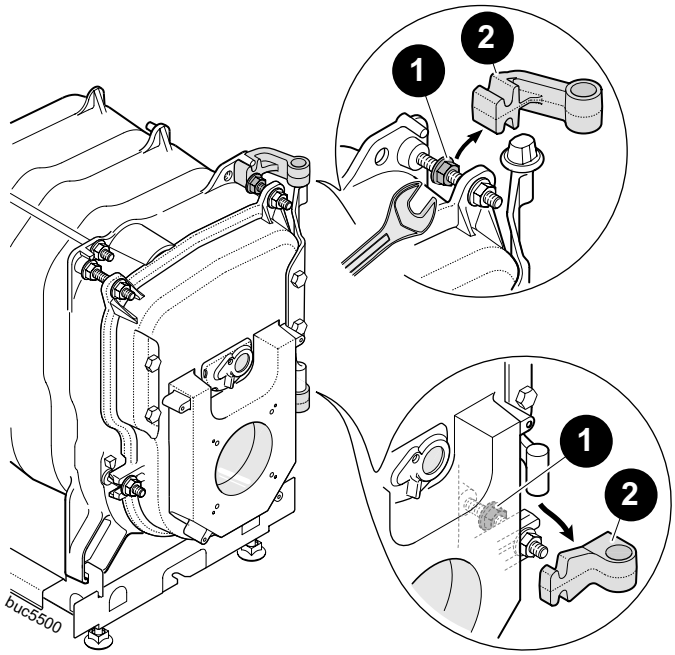

14 REVERSE THE DIRECTION OF OPENING OF THE BURNER DOOR CONT'D

1. Remove the 2 screws securing the hinge.
2. Remove the cast iron hinge pin for the burner door and replace the screws back on the right-hand side.
3. Remove the 2 screws on the left-hand side..
4. Reinstall the cast iron hinge pin (2) for the burner door on the left side.

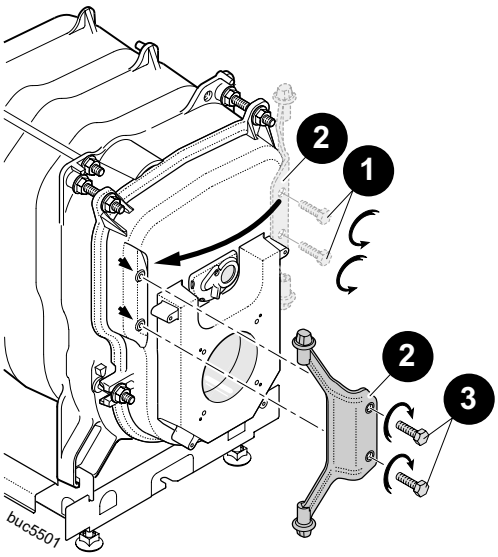

5. Re-install the hinge pins on the left side, fixing them by tightening the two nuts on the burner door hinge pins on the left side.

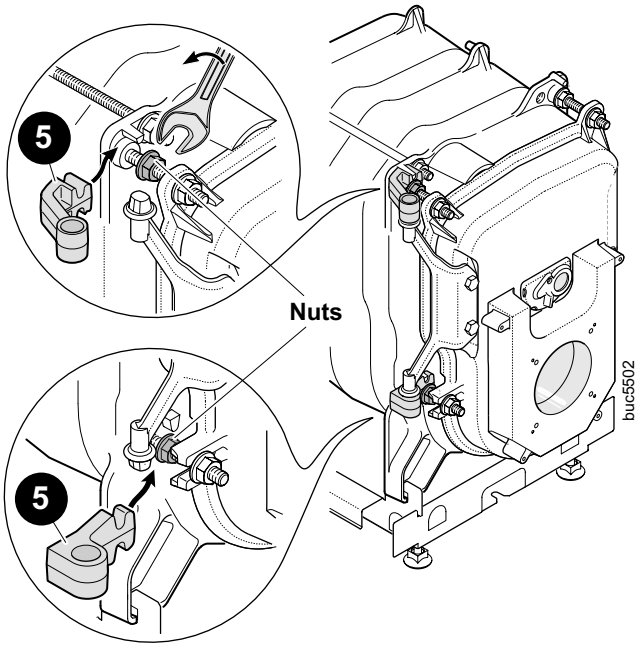

15 INSTALLING THE INSULATING MATERIAL

1. Pass the strap between the cast iron body and the base.
2. Install the insulation around the body, folding the bottom on each side of the boiler inside the base.

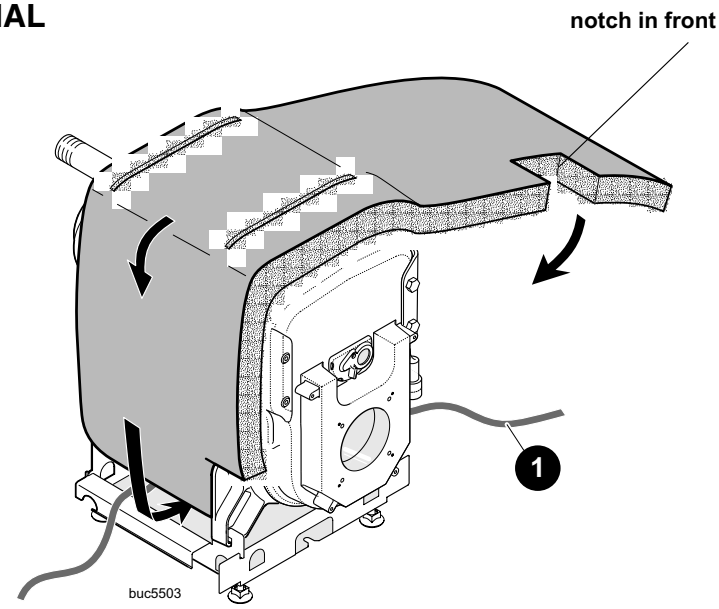

16 SECURING THE INSULATION

1. Secure the insulation using the strap(s) (1), and the attachment buckle (2).
2. Put the back insulation into place and fix it onto the previously installed insulation using the fasteners (3) by folding.

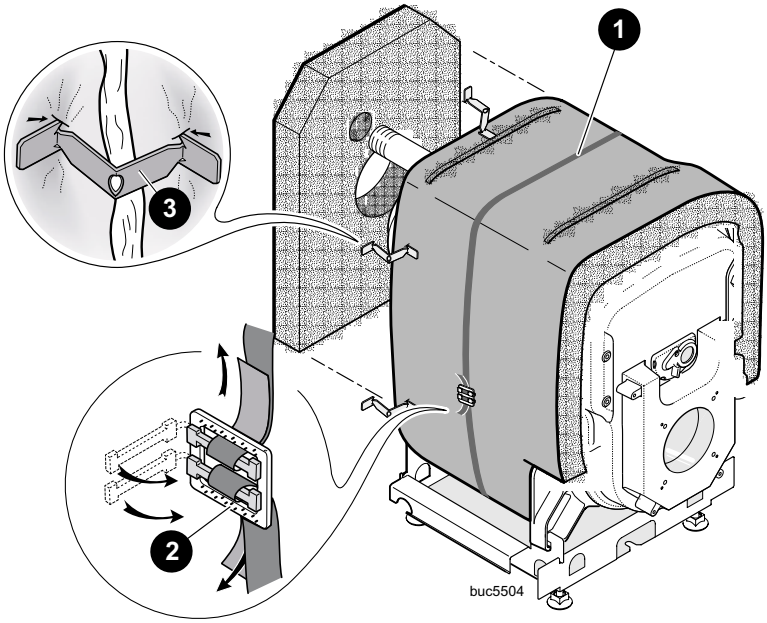

17 INSTALLING THE CONTROL PANEL SUPPORT CROSS BAR

Put the support cross bar into place on the boiler body, positioning it on:

1. The M8 studs at the front.
2. The assembly rod.
3. The rear section positioning pin.
4. Fix it at the front with two M8 flanged nuts.
5. Fix the rear section with one M8 x 30 screw and flanged nut on one side and one flanged nut on the assembly rod at the other side.

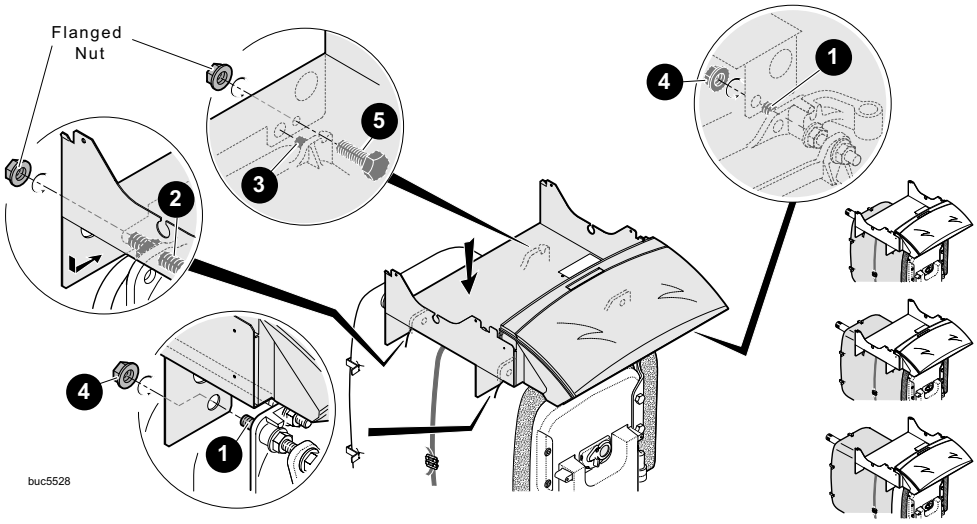

18 ASSEMBLING THE REAR CROSS BAR

Put the rear cross bar into place on the lugs of the rear section facing the outside of the boiler positioning it on:

1. The assembly Rod.
2. The rear section positioning pin.
3. Fix the rear section with one M8 x 30 screw and flanged nut on one side and one flanged nut on the assembly rod at the other side.

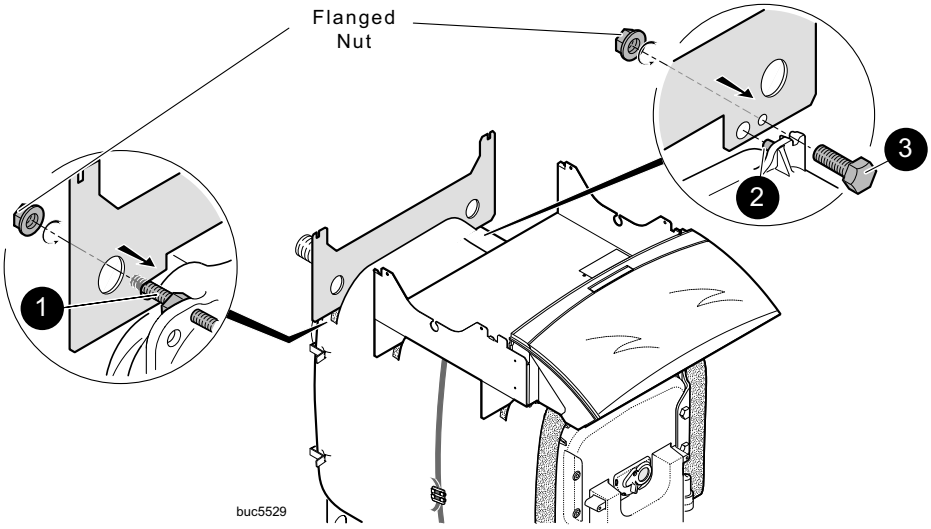

19 INSTALLING THE CONTROL PANEL

1. Lift the window.
2. Slide the control panel into the opening.

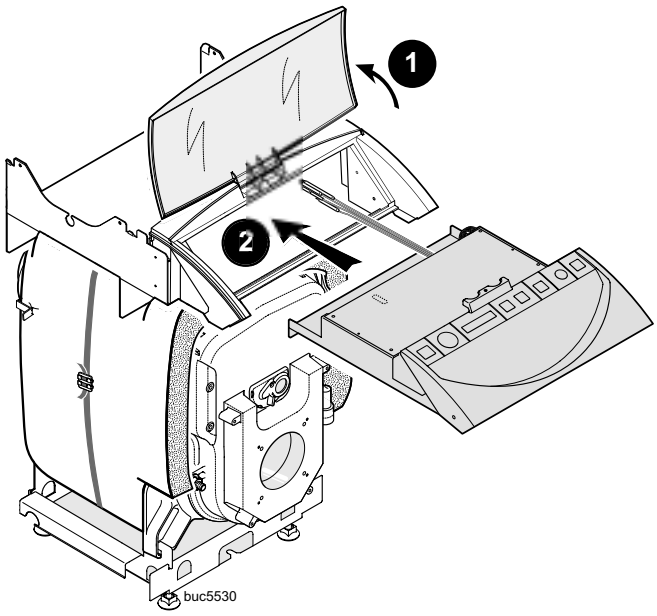

20 FIXING THE CONTROL PANEL

1. Fix the lower front part of the control panel on the cross bar using two self tapping screws.
2. Fix the top part of the control panel using the black screw for plastic supplied for this purpose.
3. Fix the back of the control panel on the top of the boiler using the 3.9 x 32 self tapping screw and serrated washer.

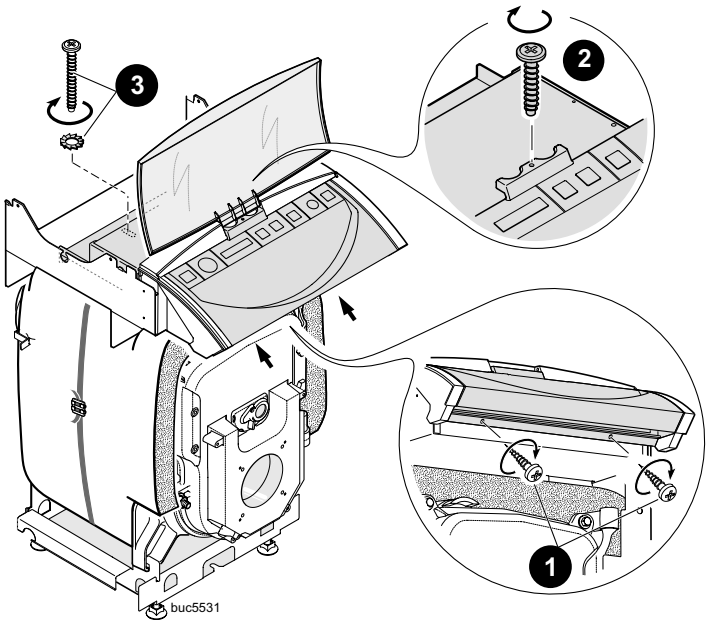

21 ROUTING THE BURNER CABLE

1. Put the burner cable in the grommet, (supplied in the control panel instructions pack).
2. Install the grommet and the burner cable into the notch in the control panel support on the side opposite the hinges of the burner door, (left side). If the direction of the opening of the burner door has been reversed, it will be on the right side.

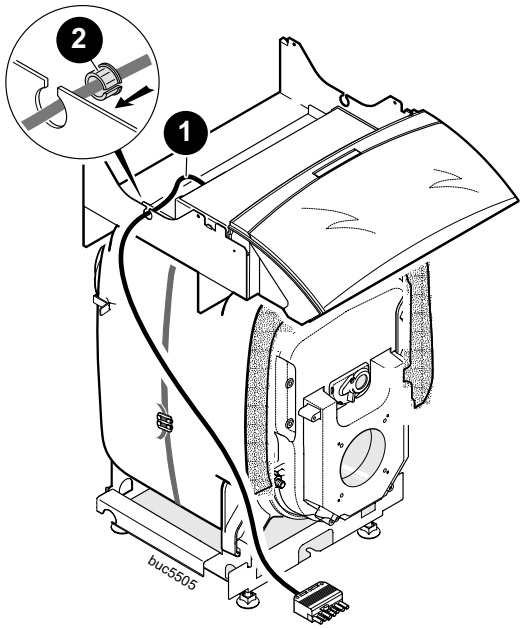

22 INSTALLING THE SENSORS

1. Insert the sensors in the sensor pocket at the back of the boiler.
2. Use the sensor pocket contact spring (delivered in the casing instructions pack) to separate the sensors. Secure the cables in place using the sensor pocket spring.

Note. *Route the sensor cable/capillary on the opposite side from mains electrical wiring.*

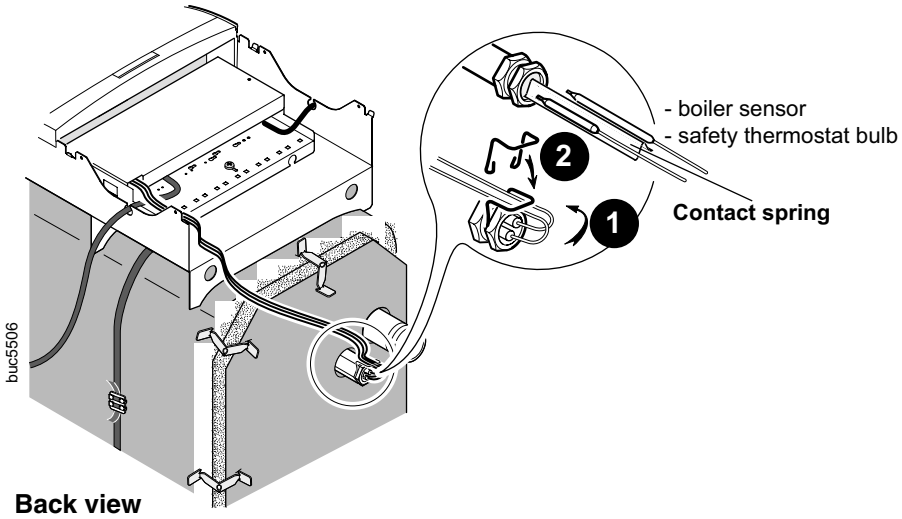

23 INSTALLING THE SIDE PANELS

1. Put the front of the side panel into place, engaging the lower notch of the panel in the cross bar of the base.
2. Make sure that the lower fold in the panel is correctly positioned under the fold of the cross bar.
3. Straighten the side panel and pull it upwards.
4. Attach the side panel to the lugs of the control panel support, pulling its upper fold upwards such that the upper fold of the side panel is centred and blocked between the two notches.
5. Fix the side panels using 2 self tapping screws and serrated washers.

Note. *Take care to route the burner cable through the notch at the front edge of the side panel.*

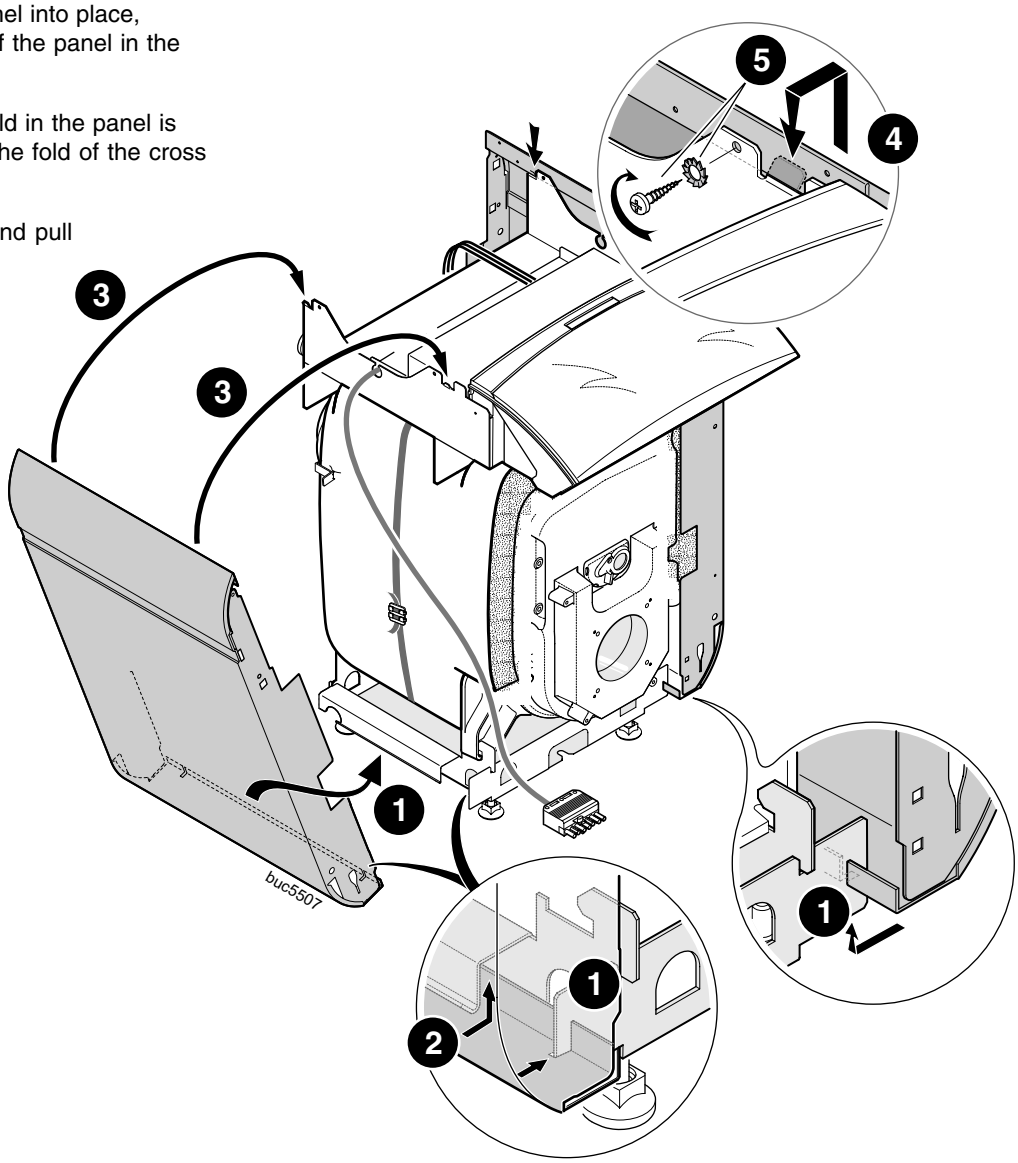

24 INSTALLING THE REAR PANEL

1. Fix the rear panel on the side panels using two plastic clips.
2. Fix it using four self tapping screws and serrated washers supplied in the fasteners pack.
3. Put the two cable protectors into place.

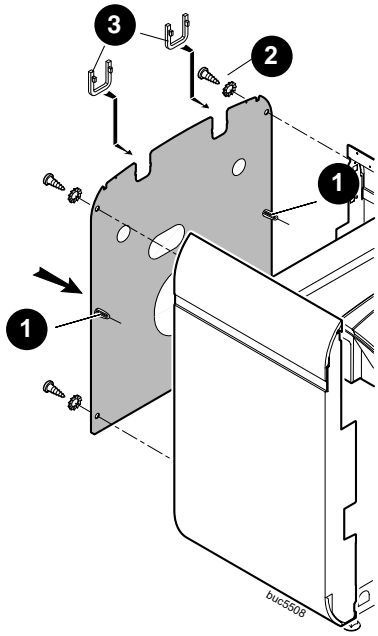

25 INSTALLING THE COVER

1. Put the cover into place allowing it to fit over the rear panel and push it forwards to fix it in the two side panels bushings.
2. Fix it at the back with two 3.94 x 12.7 self tapping screws and 2 serrated washers.

Note. *It may be found suitable to make electrical connections before completing the casing assembly. If so refer to Frame 33, 34 and 35.*

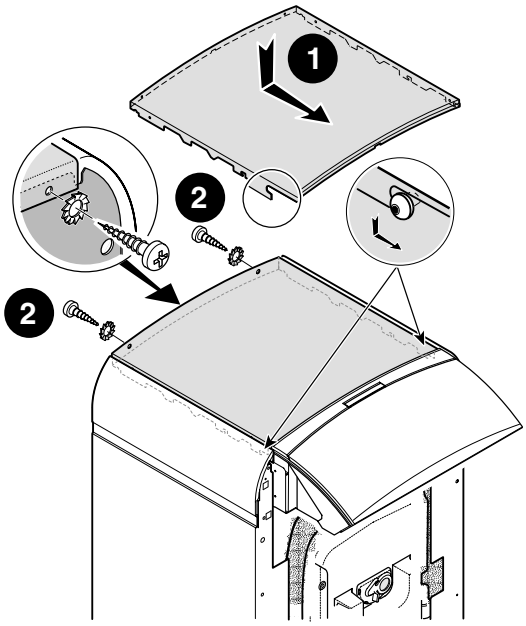

26 INSTALLING THE FRONT BURNER DOOR PANELS AND SECURING BURNER CABLE

1. Fix the two front burner door panels using four M6 x 10 black screws (delivered in the screw bag).
2. Install the cable clamp on the side panel (on the side chosen for installation of the burner cable opposite the hinges of the burner door).
3. Fix the cable in position using the cable clamp and the two 3.5 x 25 screws.

   Slide the surplus cable backwards between the insulation and side panels.

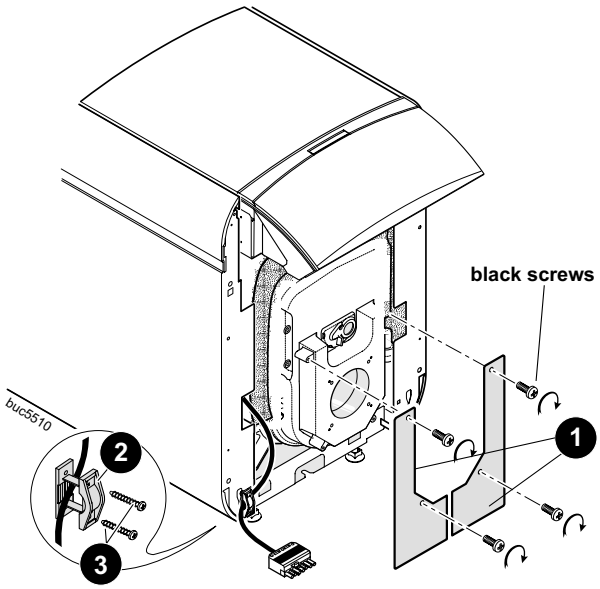

27 ASSEMBLING THE FRONT PANEL

1. Lift the control panel window.
2. Attach the front panel in the openings near the bottom of the side panels.
3. Slide the two lugs of the front panel into the notches of the side panels and then fix it in the two spring clips.
4. Push the front panel into contact with the side panels and fix it using two black M6 x 10 screws (delivered in the casing screw bag).

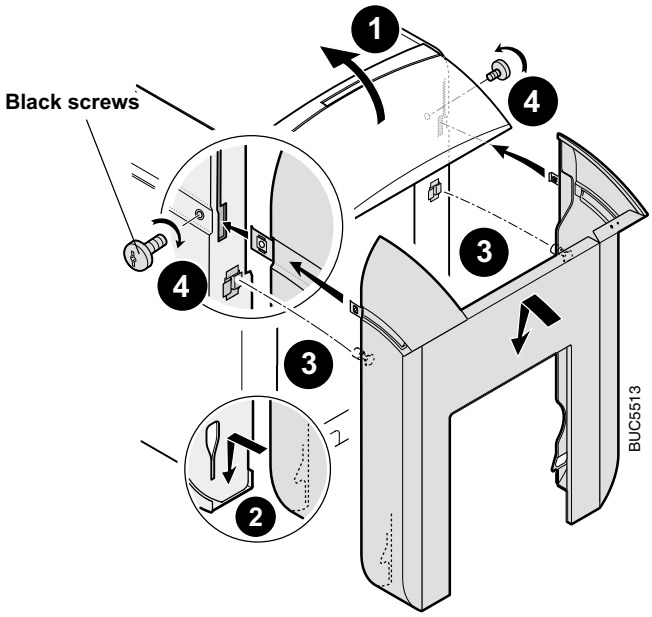

28 FINAL LEVELLING OF THE BOILER

Level the boiler by adjusting its feet (preinstalled on the base).

1. Basic height 35mm, adjustment range: 18-40 mm using 19mm spanner.

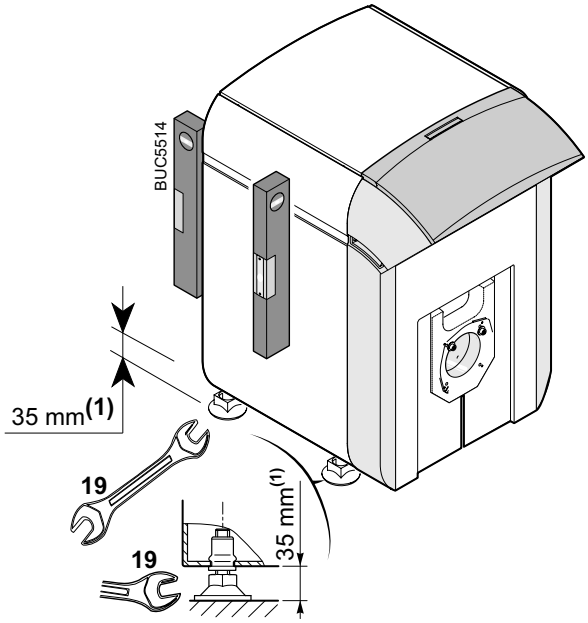

29 NAME PLATE

Affix the self adhesive name plate on the side of the boiler.

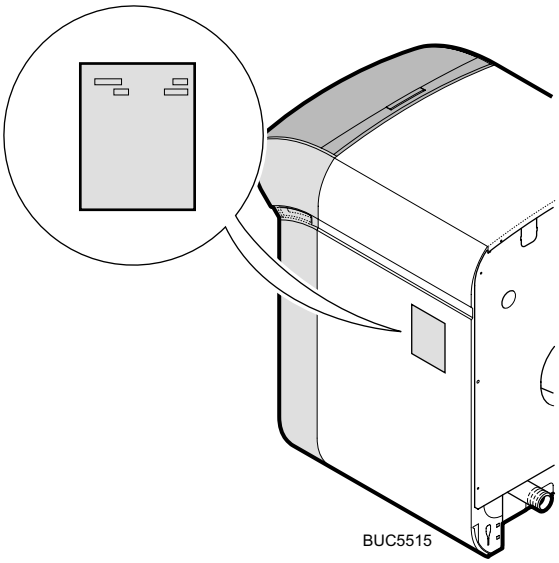

30 CONTROL PANEL

Electrical control panel, equipped with temperature control. (Priority for domestic hot water production as original equipment if DHW sensor option fitted.)

The control panel carton contains:

- 1 control panel
- 1 boiler water temperature sensor.

The control panel incorporates a boiler thermostat controller, a domestic hot water thermostat controller, an electronic thermometer and a safety thermostat.

The boiler thermostat - controls the boiler operating temperature.

The safety thermostat (with manual reset) - if the boiler temperature rises abnormally (110ºC), the safety thermostat cuts off the burner electricity power supply.

WARNING. In this case, you must call your installer.

The domestic hot water thermostat - if DHW sensor kit is not fitted then the control operation is nullified and only the boiler flow temperature is shown on the display. If DHW sensor kit (FM 45) is fitted then the thermostat is used to adjust the average domestic hot water storage temperature giving priority to preparation of domestic hot water.

The domestic hot water priority activates the burner and the DHW load pump and stops the central heating pump whenever a domestic hot water heating request is received. During summer conditions, the boiler temperature is not maintained between hot water requests. The domestic hot water temperature is measured by the DHW sensor and shown on the display.

31 TECHNICAL CHARACTERISTICS - SENSORS

Value of water sensors (boiler and domestic hot water)

Thermostat Knob setting	Temperature in ° C	Resistance in ohm	Thermostat Knob setting	Temperature in °C	Resistance in ohm
			5	50	3,661
1	10	19,691	6	60	2,535
2	20	12,474	7	70	1,794
3	30	8,080	8	80	1,290
4	40	5,372	9	90	941

32 ELECTRICAL CONNECTIONS

WARNING. The electrical connections must be made by a qualified professional. The electrical wiring has been carefully checked in the factory and the internal connections of the control panel must not be modified in any event.

The electrical connections should be made following the information shown on the electrical diagrams delivered with the unit and the directions given in the instructions.

The electrical connection must comply with standards in force. The equipment must be powered by a circuit containing a remote double-pole switch with opening ≥ 3mm.

WARNING. The boiler must be earthed.

All connections must be made using the terminal blocks provided for this purpose at the back of the boiler control panel.

Connections cables are brought inside the boiler through cut-outs provided in the boiler back panel, which are large enough for the use of commercially available conduit if required.

These cables are secured at the back of the control panel using cable clamps (cable clamps supplied in a separate pack) that are to be installed on the sheet metal.

IMPORTANT. The maximum current that can be switched per output is 2A cos. φ = 0,7 (Max. power 450W, start current less than 16A).

WARNING. Sensor cables must be separated from cables in 230V circuits.

- In the boiler: use two cable glands on each side of the boiler for this purpose.
- Outside the boiler: use two cable ducts or cable ways with a minimum distance of 100mm between them.

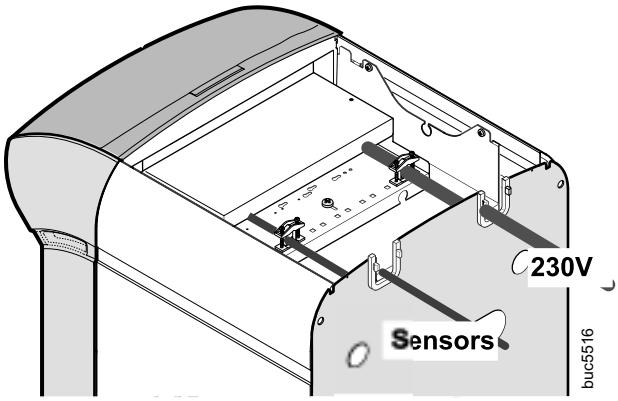

33 BASIC CONNECTIONS

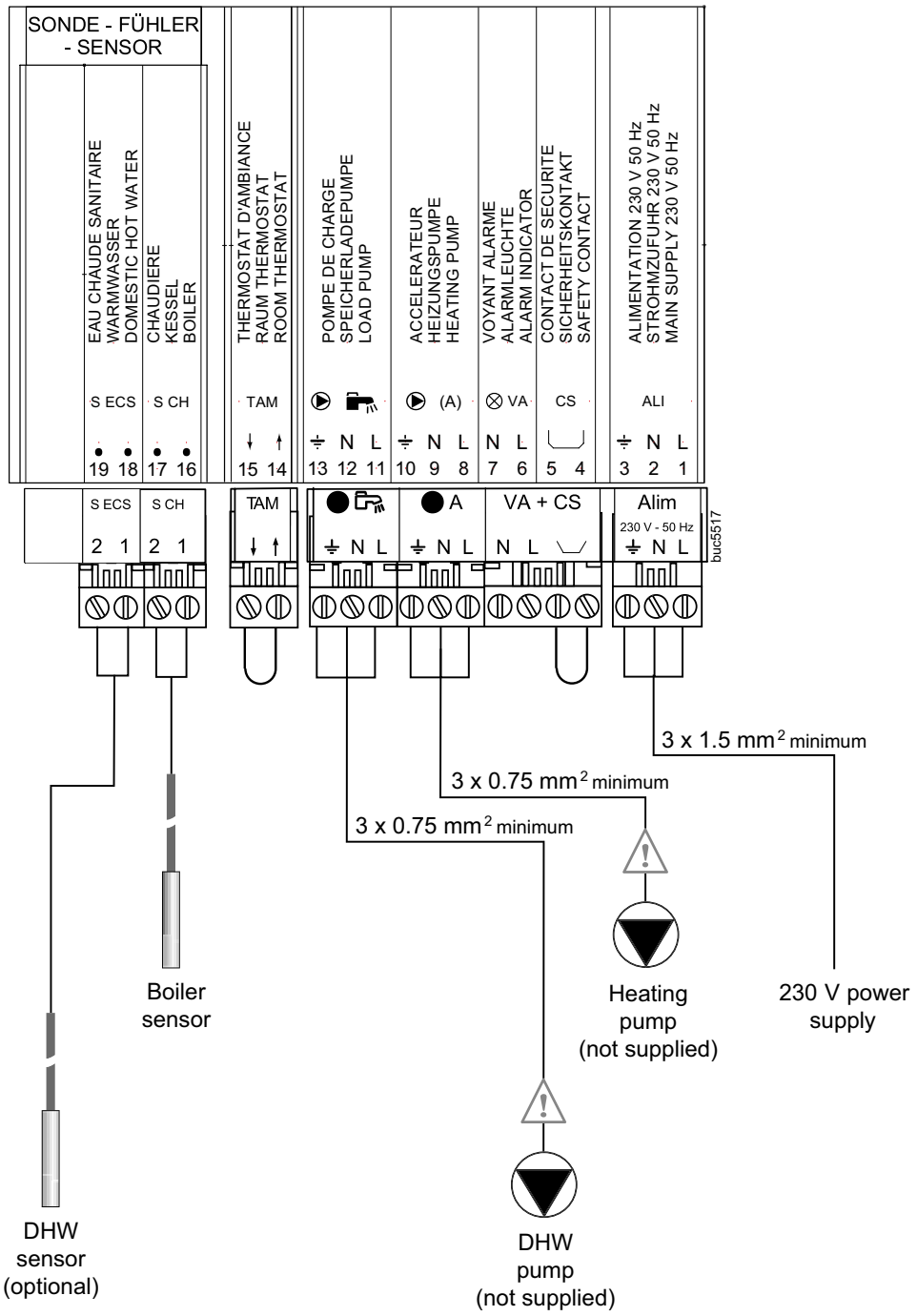

WARNING. Sensor cables must be separated from cables in 230V circuits (see Frame 32).

34 CONNECTIONS OF COMPONENTS (NOT SUPPLIED)

Additional system components may be wired as follows:

- Room thermostat at terminals 14 and 15 after removal of link.
- Safety contact to terminals 4 and 5 after removing link.
- Remote alarm to indicate overheat, low water pressure etc. to terminals 6 and 7.

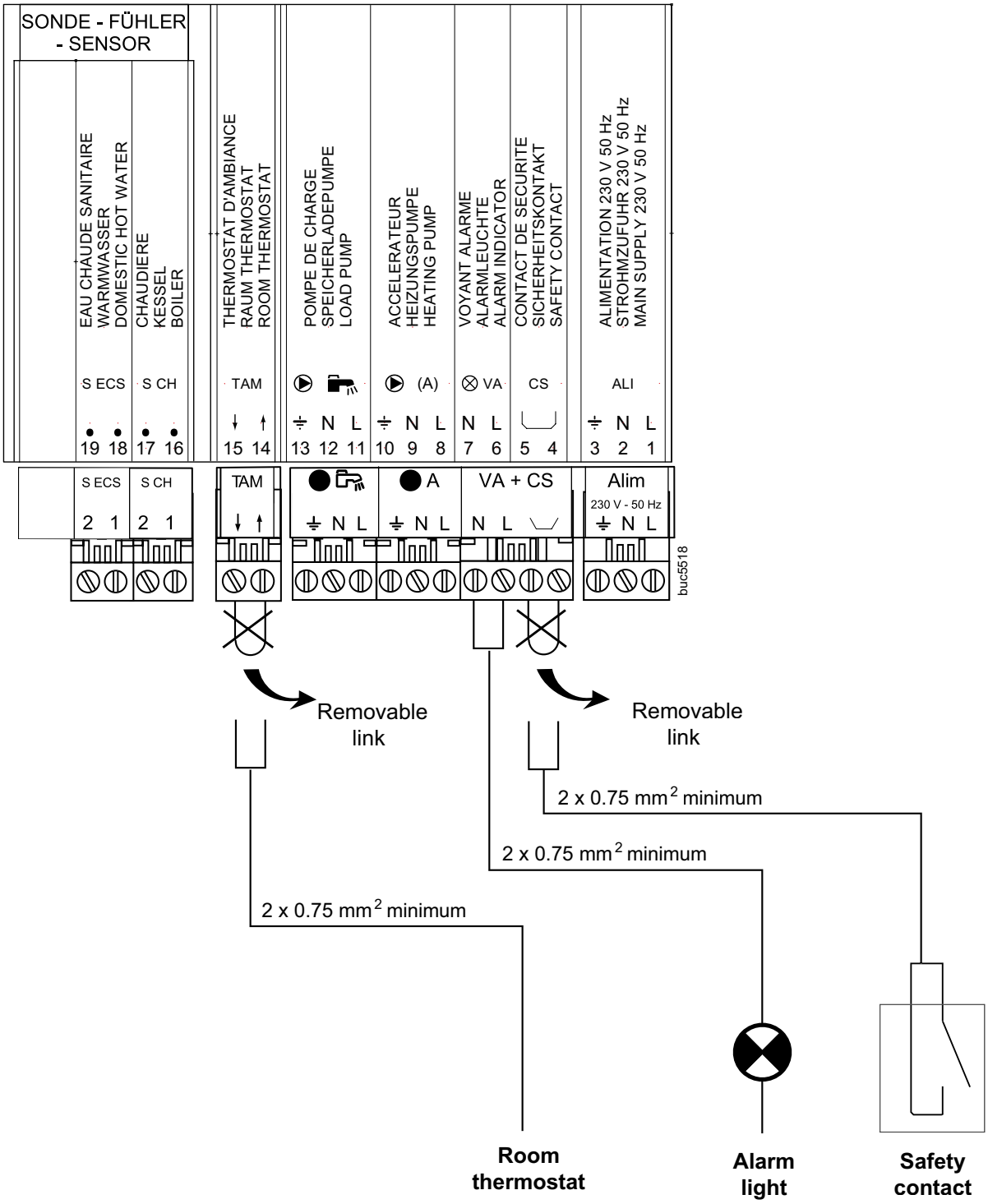

WARNING. Sensor cables must be separated from cables in 230V circuits (see Frame 32).

35 WIRING DIAGRAM

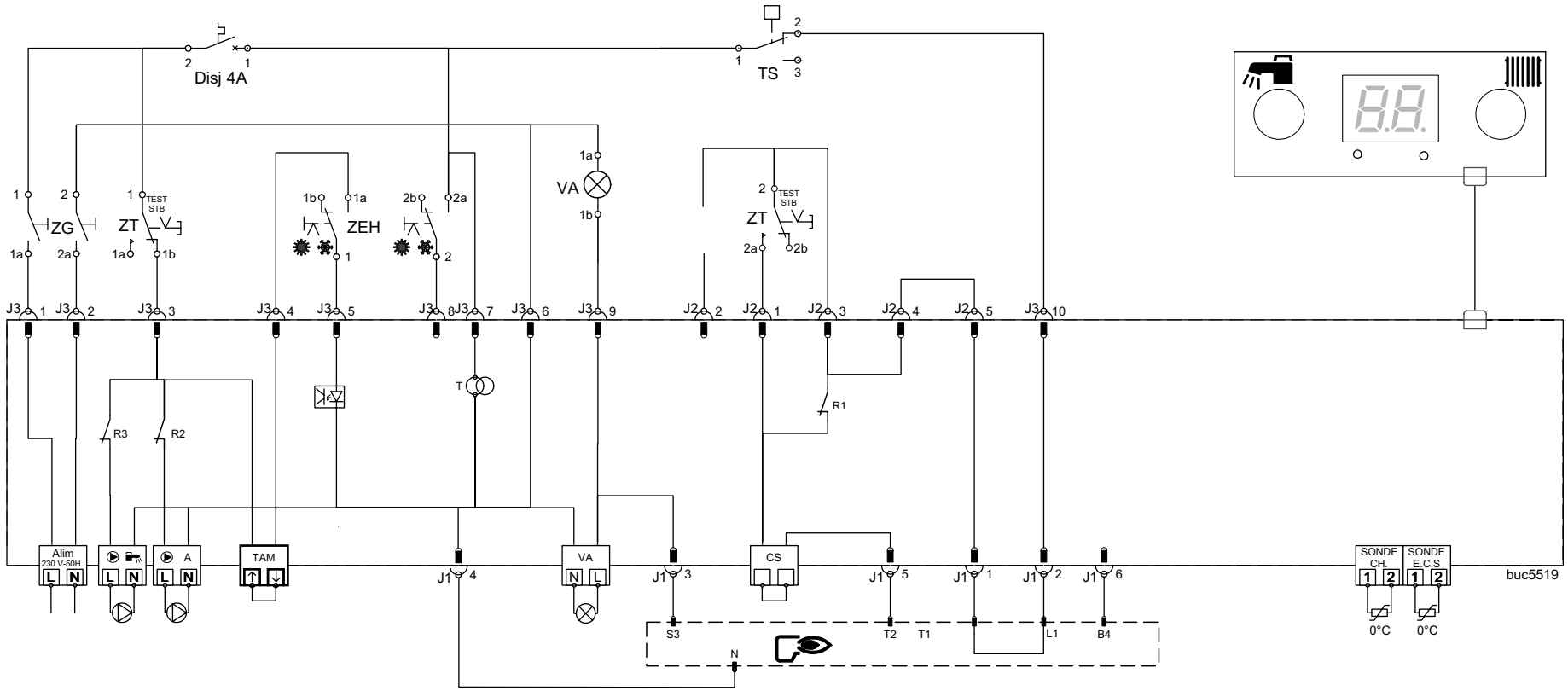

A	HEATING PUMP
	DHW (LOAD) PUMP
ALI	SUPPLY
	BURNER
CS	SAFETY CONTACT
DJ4A	CIRCUIT BREAKER
J	PRINTED CIRCUIT CONNECTOR
L	LINE
N	NEUTRAL
R1	BURNER CONTROL RELAY
R2	HEATING PUMP CONTROL RELAY
R3	DHW PUMP CONTROL RELAY
SCH	BOILER SENSOR
SECS	DOMESTIC HOT WATER SENSOR
TAM	ROOM THERMOSTAT
TCH	BOILER THERMOSTAT
TS	SAFETY THERMOSTAT
VA	ALARM LIGHT
ZG	MAIN SWITCH
ZEH	SUMMER-WINTER SWITCH
ZT	TEST SWITCH

36 SETTINGS (IF DHW SENSOR OPTION FITTED)

Access to DHW pump overrun adjustment potentimeters and the DHW load temperature limiter.

1. Remove Screws and washers.
2. Remove the top panel from the boiler.
3. Remove the screws and washers.
4. Remove the PCB protection plate.

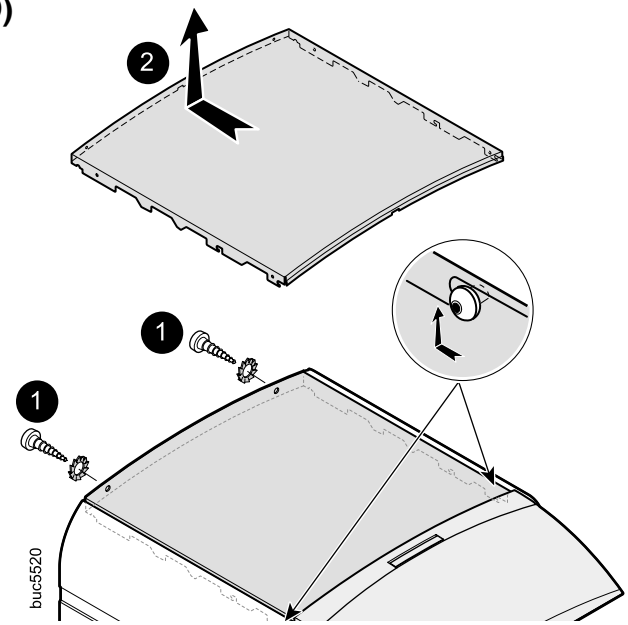

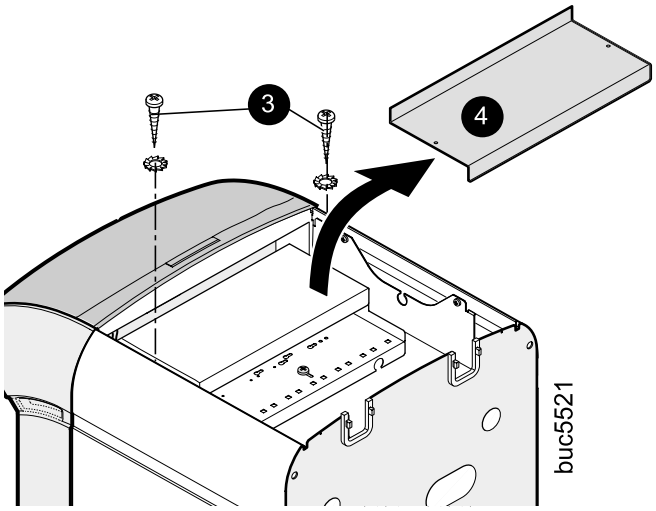

37 SETTING THE DHW PUMP OVERRUN AND LOAD TEMPERATURE LIMITER

Setting the DHW Pump Overrun

1. The potentiometer on the PCB in the boiler is used to adjust the DHW pump overrun.

   The overrun can vary with an adjustment range from 0 to 10 minutes (factory setting 4 min.)

Setting the Domestic Hot Water Load Temperature Limiter

2. The potentiometer on the P.C.B. in the boiler is used to adjust the boiler temperature while heating domestic hot water.

   The load temperature setting can vary from 60 to 90ºC (factory setting 75ºC).

Reassembly

3. At the end of the work, reassemble the P.C.B. protection plate and the top panel, as for access but in the reverse order.

Note. *Do not omit the serrated washers.*

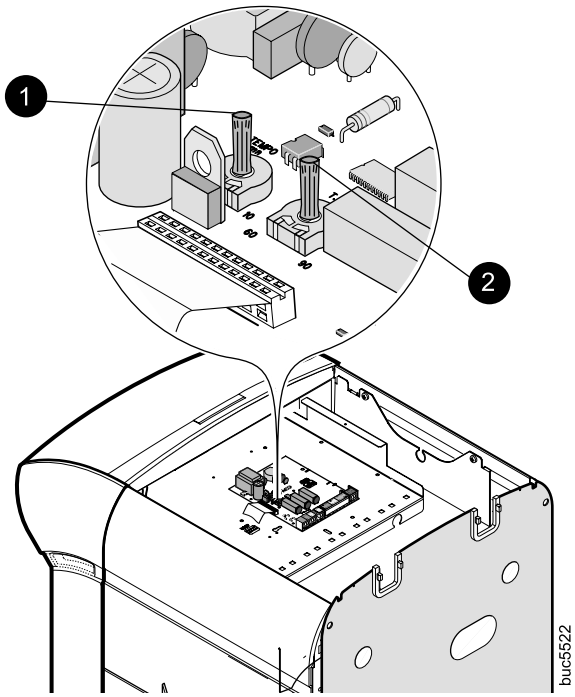

38 DEACTIVATING THE DOMESTIC HOT WATER PRIORITY

When the domestic hot water priority is deactivated, heating is no longer cut off during domestic hot water heating phases.

- Switch off the boiler power supply.
- Remove the front panel proceeding as follows:

1. Lift the control panel cover.

2. Unscrew the two front panel side attachment screws.

3. Pull the front panel clear from the clips and the notches in the top part, pulling it towards you.

4. Remove the front panel from the notches near the bottom of the side panels.

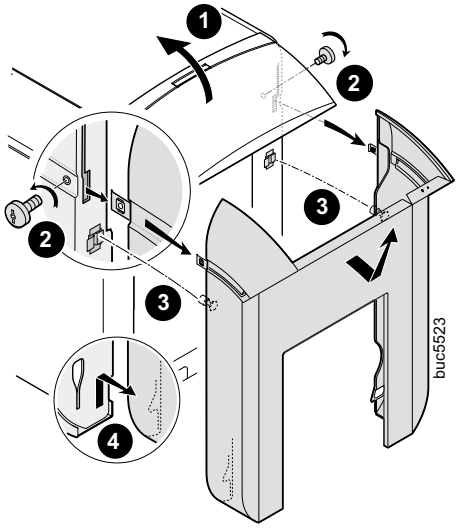

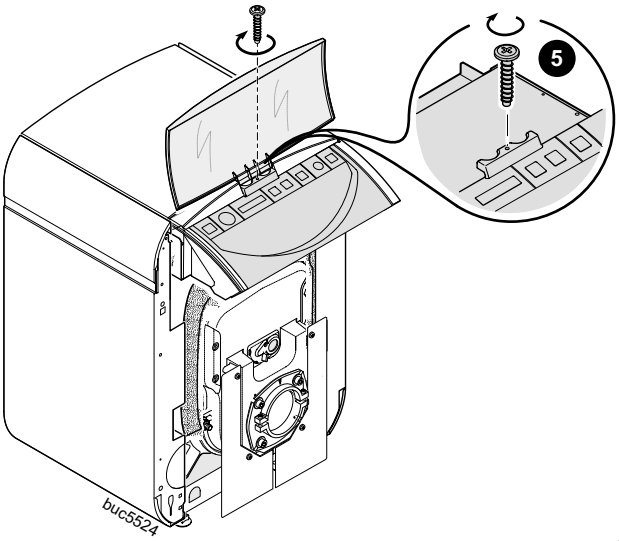

5. Unscrew the attachment screw fastening the front of the control panel.

6. Tilt the front panel.

7. Remove the shunt (bridge).

8. Close the control panel and put the front panel back into position, using the same procedure as for disassembly in the reverse order.

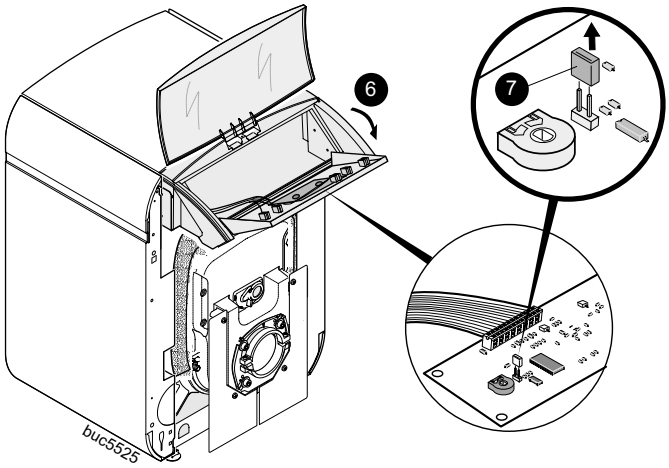

39 HEATING PUMP OVERRUN

The heating pump overrun is fixed at 12 minutes after the room thermostat is satisfied or changing to summer mode.

40 FUEL OIL OR GAS CONNECTIONS

Refer to the instructions supplied with the burner.

41 COMMISSIONING

IMPORTANT. Domestic hot water circuits (if they exist) and heating circuits must have been filled and bled, and leak tightness tests must have been carried out on them, in accordance with the instructions for the domestic hot water calorifier (if existing) and boiler.

Refer to the following instructions to start up the boiler:

- the instructions delivered with the burner.
- the instructions delivered with the domestic hot water calorifier, (if existing).

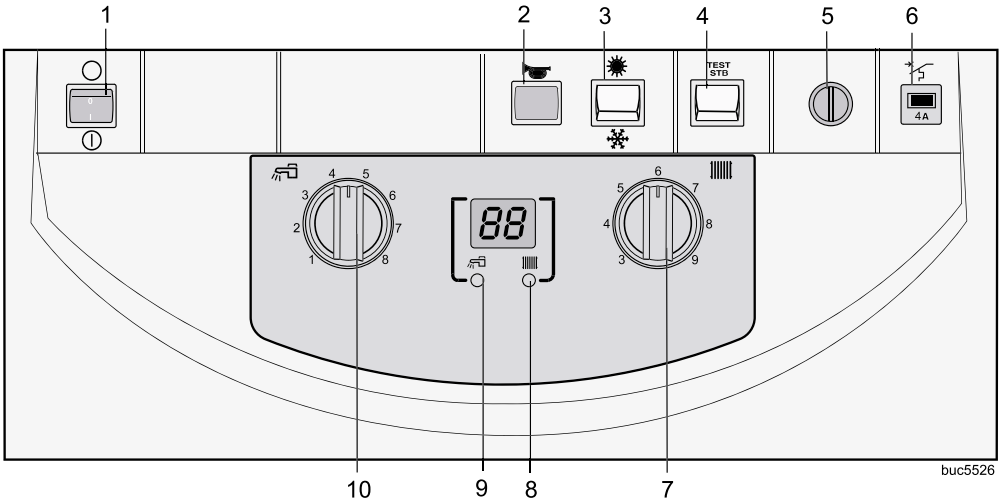

1 Boiler on/off switch

Position ⏽ ..... ON Position ◯ ..... OFF

2. Alarm light

Comes on when the burner is in safety lockout

3. Summer/Winter switch

Winter ❄ Start the heating pump

Summer ☼ The heating pump stops 12 minutes after the changeover to summer mode.

4. Test-STB button

When held in the pressed position it tests the safety thermostat and cuts off the pump(s)

5. Safety thermostat (with manual reset) Set to 110°C

6. Timed circuit breaker (4A)

7. Electronic thermostat

Adjustment of the boiler flow temperature, 30 - 90°C

8. Light on

Indicates the display above it is showing the boiler flow temperature

DOMESTIC HOT WATER

(combination boilers or those fitted with a DHW sensor)

Items 9 & 10 only.

9. Light on

Indicates the display above it is showing the DHW temperature.

10. Electronic thermostat

Adjustment of the average DHW storage temperature, 10 - 80°C.

Notes for items 9 & 10 only.

Combination boilers or those fitted with a DHW sensor. *When the system is switched on it performs an air elimination sequence of the hot water calorifier lasting for 1 minute, by intermittently operating the DHW load pump and the CH pump. This air elimination sequence is de-activated if the calorifier temperature is more than 25°C*

Summer/Winter Switch. *If DHW has been in demand, a delay of approx. 1 minute will occur for the change from the DHW pump to the CH pump, after the changeover to Winter mode.*

MESSAGES - ALARMS

The display may show the following messages in the case of a malfunction:

MESSAGE	FAILURE	COMPONENT	PROBABLE CAUSE	REMEDY
AL 50	Installation stops	Boiler sensor	The corresponding sensor circuit is interrupted or is short circuited	Inform the installer
AL 52	Installation continues to operate but DHW no longer heated	DHW sensor		

Note. *If the power supply is interrupted with an AL 52 alarm and no corrective action is taken then, when the power is resumed, the boiler will restart but continue to operate in a CH mode only and alarm AL 50 will NOT be displayed.*

42 COMMISSIONING AND TESTING cont'd

A. ELECTRICAL INSTALLATION

1. Checks to ensure electrical safety should be carried out by a competent person.
2. ALWAYS carry out the preliminary electrical system checks, i.e. earth continuity, polarity, resistance to earth and short circuit, using a suitable meter.

B. FOR GAS INSTALLATION

1. The whole of the gas installation, including the meter, should be inspected and tested for soundness and then purged in accordance with the recommendations of the relevant standards listed on page 4.

WARNING. *Whilst effecting the required gas soundness test and purging air from the gas installation, open all windows and doors, extinguish naked lights and DO NOT SMOKE.*

43 INITIAL LIGHTING

1. Check that the system has been filled and the boiler is not air locked - air in the boiler could damage the heat exchanger. For this reason the airvent located in the left top side must never be shut off.
2. Check that all the drain cocks are closed and any valves in the flow and return are open.
3. Check that the GAS SERVICE COCK IS ON.
4. Unscrew the overheat reset button cap and press the reset button.
5. Set the boiler thermostat to maximum.
6. Set the summer/winter switch to the winter setting.
7. Switch the electricity supply ON and check that all the external controls are calling for heat. Set main boiler switch to on.
8. The burner will commence the ignition sequence. If the burner has failed to light then it will lock out. Press the reset button to restart the ignition sequence.
9. Operate the boiler for 20 minutes and for gas fired boilers check the gas rate (Table 1).
10. Refer to the burner instructions for specific operating features.

44 GENERAL CHECKS

Make the following checks for correct operation.

1. The correct operation of ANY secondary system controls should be proved. Operate each control separately and check that the main burner or circulating pump, as the case may be responds.
2. Water circulation system;
   a. With the system HOT examine all water connections for soundness.
   b. With the system still HOT, turn off the gas or oil burner, water and electricity supplies to the boiler and drain down to complete the flushing process.
   c. Refill and vent the system, clear all air locks and again check for water soundness.
   d. Balance the system.
3. Finally set the controls to the User's requirements.

45 HANDING OVER

ROUTINE OPERATION

Describe the function of the boiler and system controls and show how they are adjusted and used.

Hand these Installation and Servicing Instructions, User's Instructions and Log book to the customer and request him to keep them in a safe place for ready reference.

IMPORTANT. Point out the owner that the boiler must have regular maintenance and cleaning, at least annually, in order to ensure reliable and efficient operation. Regular attention will also prolong the life of the boiler and should preferably be performed at the end of the heating season.

Recommend that a contract for this work should be made with the regional gas authority or a CORGI registered heating installer for gas fired boilers.

46 BOILER MAINTENANCE

WARNING. The operations described below shall always be performed with the boiler and the power supply switched off.

The boiler front panel has to be removed to access the various devices to be maintained and checked.

Proceed as follows:

1. Lift the control panel cover.
2. Unscrew the two front panel side attachment screws.
3. Pull the front panel clear from the clips and the notches in the top part, pulling it towards you.
4. Remove the front panel from the notches at the bottom of the side panels.

Cleaning the Casing Material and Control Cover

Use a soapy solution and sponge only. Rinse with clean water and dry with chamois leather or soft cloth.

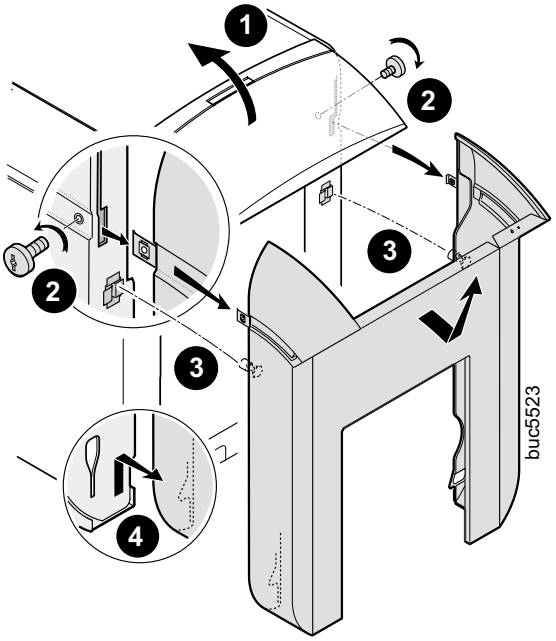

47 CLEANING THE FLUEWAYS

1. Disconnect the burner cable.
2. Unfasten the four flanged nuts and flat washers using a 13mm spanner and open the burner door.

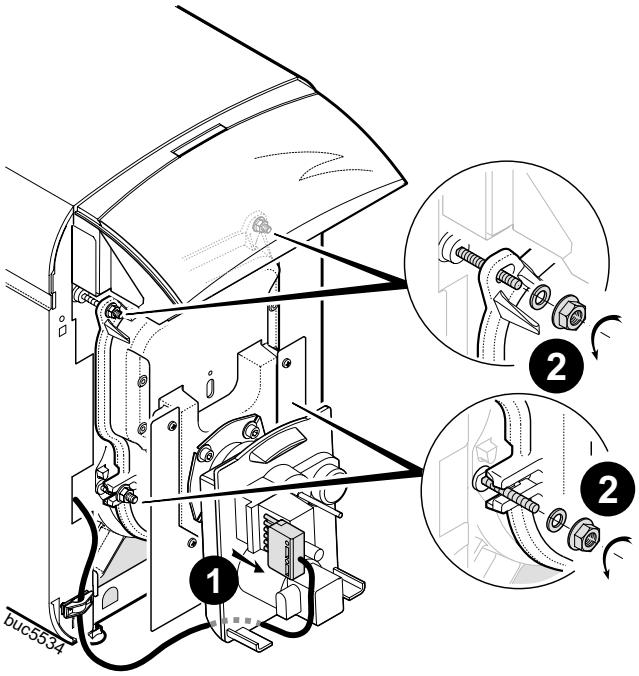

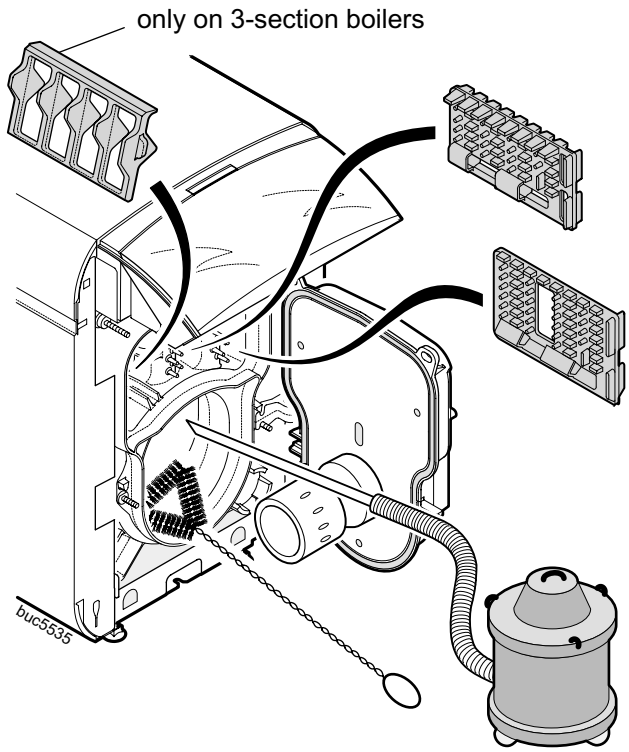

3. Remove the baffle plates if necessary (variable number depending on the boiler model).
4. Carefully sweep the flueways with the brush supplied for this purpose.
5. Also brush out the combustion chamber.
6. Vacuum the soot from beneath the flue ways and in the burner with the vacuum cleaner with a tube diameter less than 40mm.
7. Replace the baffle plates .
8. Close the door and replace front panel.

48 SYSTEM MAINTENANCE

Water Level

Check the water level in the installation regularly, and if necessary top it up without allowing a sudden inlet of cold water into the hot boiler.

The operation should only be necessary a few times per season; if it has to be done more frequently, there is probably a leak which should be found and corrected without delay.

Safety Devices

Check that safety devices, and particularly the heating circuit safety valve, are working correctly at regular intervals, and at least when the boiler is cleaned.

Draining

It is recommended that an installation should not be emptied unless absolutely necessary.

For example: when leaving for several months and/or there is a risk of frost in the building.

49 SAFETY

For boilers with gas burners

It is the law that any service work must be carried out by a registered CORGI installer.

WARNING. Always turn off the gas supply at the gas service cock, and switch off and disconnect the electricity supply to the appliance and any external controls before servicing.

IMPORTANT. After completing the servicing or replacement of components always:

- Test for gas soundness
- Check the water system is correctly filled and free of air. Air in the boiler could cause damage to the heat exchanger.
- With the system hot examine all water connections for soundness.
- Check the gas rate and measure the combustion CO/CO_2 content.
- Complete the boiler log book.
- Carry out functional checks as appropriate.

50 SERVICING SCHEDULE

To ensure the continued safe and efficient operation of the appliance it is recommended that it is checked at regular intervals and serviced as necessary. The frequency of servicing will depend upon the installation condition and usage but should be carried out at least annually.

Caradon Ideal Limited does not accept any liability resulting from the use of unauthorised parts or the repair and servicing of appliances not carried out in accordance with the Company's recommendations and specifications.

1. Light the boiler and carry out function checks, noting any operational faults.
2. Run the boiler for 10 minutes and then check the burner rate.
3. Optional test for gas fired boilers - Connect a suitable gas analyser to the sampling point fitted in the flue adapter. For correct boiler operation the CO/CO_2 ratio of the flue gas should not be greater than 0.004 ratio. If this is the case and the gas input is at least 90% of the nominal, no further action need be taken. If not proceed to 4.
4. Remove and clean the burner.
5. Inspect the heat exchanger through the burner opening. Clean the flueways.
6. Check that the flue terminal is unobstructed and that the flue system is sealed correctly.
7. After completion of servicing refer to previous frame for reference to final safety checks.

COMBINATION BOILERS

INTRODUCTION

The Buccaneer GTE Combination Boilers are automatic independent hot-water boilers designed for connecting to a flue which require a separate fuel oil or gas burner.

Models available:

- Heating and domestic hot water:
  - Buccaneer GTE Combination Boiler - Boiler with an MLS 160 or 250 litre domestic hot water tank and a standard control panel.
- An option of a Correx electric anode (AM7) may be fitted to any tank replacing the standard magnesium anode for long life.

Important Recommendations

- The boiler/tank assembly must be installed in premises free from frost. Placing the tank as closely as possible to the water supply will minimise energy losses in the pipework which should be lagged in all cases.
- It is advisable to place the boiler/tank assembly on a plinth so that the area can be easily cleaned.

Description

The tank, made of high-grade steel, is lined on the inside with vitrified enamel which protects the tank from corrosion.

The tank is also protected from corrosion by a magnesium anode which must be checked every two years and replaced if necessary (refer to the "Maintenance" chapter). The heat exchanger fitted in the tank is constructed of smooth tubing. Those surfaces coming into contact with domestic hot water are enamelled.

The tanks are heavily insulated in CFC-free polyurethane foam, thus reducing heat losses to a minimum.

The outer casing is in painted sheet metal.

Buccaneer GTE Combination

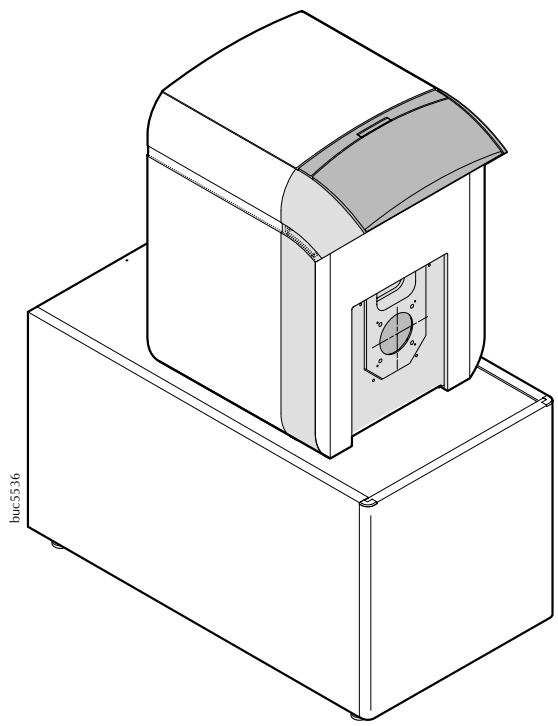

WARNINGS.

- Installation, commissioning and maintenance must be carried out by a qualified technician, in accordance with installation practices and the instructions in this document.
- Regular maintenance of the equipment is necessary to ensure safe and reliable performance.
- For the guarantee to remain valid, no modifications must be made to the domestic hot water tank.
- Central heating water and domestic hot water must never come into contact. In particular, the exchanger must not circulate domestic hot water.

Table 2 Technical Data

Boiler		GTE 4/160	GTE 5/160	GTE 5/250	GTE 6/160	GTE 6/250
Net weight	kg	264	289	352	315	379
Domestic hot water production						
Tank capacity	litres	160	160	250	160	250
Continuous flow (2) (4)	litres/h	665	690	810	885	885
Specific flow** according to EN 303-6 (3) (4)	litres/min.	20.5	20.5	30	20.5	30
Drawing capacity (in 10 min.) *** (3) (4)	litres/10min.	255	255	385	255	385

(2) Exchanger inlet temperature at 80ºC
Domestic hot water temperature at 45ºC

(3) Domestic (temperature) set to 60ºC
Domestic hot water average temperature at 40ºC
Boiler (temperature) set to 80ºC

(4) Cold water temperature at 10ºC
Pump in position 3

** Specific flow: domestic hot water flow corresponding to a minimal increase in average temperature of 30K which the appliance can provide during two successive draws of 10 minutes separated by a stoppage of 20 minutes.

*** Drawing capacity in 10 minutes: hot water flow for which water can be drawn for a period of 10 minutes with an average increase in temperature of 30K.
Condition for flow: water at 10ºC in the boiler.

COMBINATION BOILERS

Table 3 Technical Characteristics

Note. *The original factory setting of the boiler control limits the temperature of the primary circuit to 75ºC. Adjustment is possible from 50ºC to 95ºC. refer to the instructions for the boiler control panel.*

Calorifier Size		**160**	**250**
Primary circuit (heating water)			
Coil water capacity	l	5.8	7.6
Coil exchange area	m^2	0.90	1.2
Secondary circuit (domestic hot water)			
Water capacity	l	160	250
Shipping weight	kg	115	180

51 DIMENSIONS

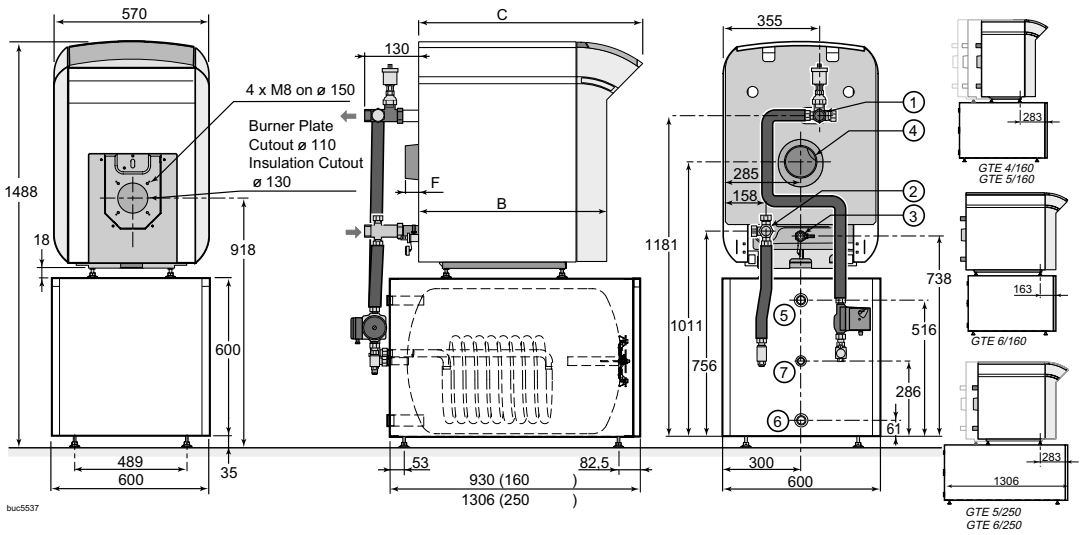

	B	C	ø D	F
GTE 4/160	692	812	125	50
GTE 5/160	819	939	125	50
GTE 6/160	946	1066	153	99
GTE 5/250	819	939	125	50
GTE 6/250	946	1066	153	99

1 Heating supply G1
2 Heating return G1
3 Filling and emptying tap (connection for pipe ø int. 14mm)
4 Flue spigot OD, ø D
5 Domestic hot water outlet G1
6 Domestic cold water inlet G1
7 Domestic hot water circulation loop return G3/4
R = thread
G = cylindrical external thread, leak tightness by flat washer

52 BOILER CLEARANCES

The minimum dimensions indicated on the following drawing must be respected to ensure good access around the boiler.

Note.

To allow the inlet of the combustion air, the boiler room must be adequately ventilated, the section and the location of which must comply with local recommendations.

Boiler	L (mm)
GTE 4/160	930
GTE 5/160	939
GTE 6/160	1066
GTE 5/250	1306
GTE 6/250	1306

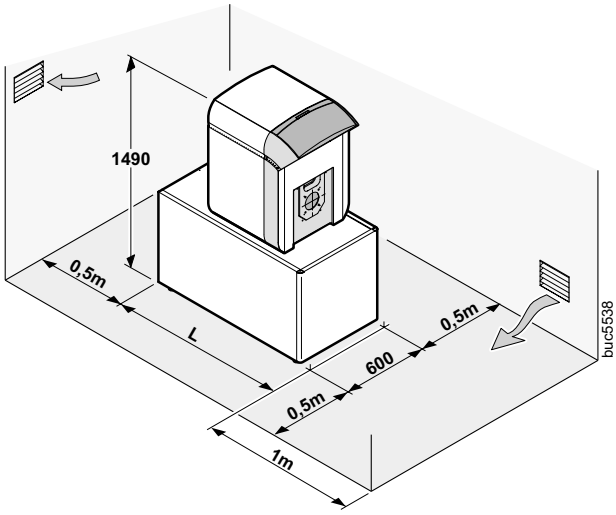

HYDRAULIC CONNECTIONS

Installation must be carried out following the regulations in force, trade practices and the recommendations contained in this leaflet.

WARNING. There must be no obsturcitons, complete or partial, between the boiler and the safety valves.

WARNING. Heating installations must be designed and assembled so that central heating water and any products introduced into it cannot find their way into the drinking water system. A removable connection must be installed for filling the heating circuit according to current regulations.

- Before making the hydraulic connections for the central heating circuit, it is essential to flush the water system to eliminate any dirt which may damage certain parts (safety valve, pumps, flap valves . . .)
- Be careful to isolate hydraulically the primary and secondary circuits using stop valves. This will facilitate matters during maintenance.

Inclusion of these valves means that maintenance of the unit and its parts can be carried out without having to empty it. They mean that the tank can be carried out without having to empty it. They also mean that the tank can be isolated whilst a watertight pressure test is carried out if the test pressure is above the pressure admitted by the tank.

Connection of the Domestic Hot Water Circuit

The domestic hot water units can operate under a maximum service pressure of 10bar. Generally, they operate at 7 bar.

- Before connecting the domestic hot water circuit, the pipework must be flushed to wash out any metal or other dirt which could damage certain parts (safety units, pump, valves . . .).
- The connection between the safety valve and the unit must not contain any restrictive parts. Also, the flow pipe for the safety valve must not be obstructed. If the supply pressure exceeds 5.5bar, a pressure reducer must be included "upstream" of the tank. It is advisable to site the pressure reducer "downflow" of the water meter so as to have the same pressure in all the pipes.
- Include a drain valve in the boiler as well as a "syphon funnel" for the safety unit.
- Connection to the cold water supply must be carried out according to the drawing in Frame 53. Components must conform to the standards and regulations in force. A stop valve is installed into the cold water supply.

WARNING. If the distribution pipework is in copper, a sleeve in steel, cast iron or insulating material must be placed between the hot water outlet of the unit and this pipework so as to avoid any corrosion at the level of the branch pipe.

Notes.

- *The safety unit and its connection to the tank must be at least of the same diameter as the tanks domestic cold water supply pipework (minimum ¾").*
- *The safety unit's outlet pipe must have sufficient, continuous slope and its section must be at least equal to that of the orifice for the safety unit outlet (so as to avoid slowing down the water flow when there is an excess of pressure).*
- *The level of the safety unit must be below that of the cold water inlet so it can be drained. If this is not the case, install a draining pipe at the lowest point of the tank (see drawing in Frame 53).*
- *To ensure hot water as soon as the taps are opened, a circulation loop between the mains supply and the recirculation pipes of the unit can be installed.*

Important Recommendations for Connecting the Boiler to the Heating Circuit and the Drinking Water Supply

The installation shall be made in keeping with applicable regulations and codes of practice and the recommendations contained in these instructions.

The expansion vessel shall be connected to the boiler without any valve or stop valve between the boiler and the expansion vessel.

The heating system shall be designed and installed in a way as to prevent the water from the heating circuit and any substances added to it from flowing back into the drinking water circuit located before it. The installation shall not be directly connected to the drinking water system.

As a general rule, a check valve shall be fitted on the cold water supply pipe.

VERY IMPORTANT. Under safety rules, a sealed safety valve calibrated to 7bar shall be fitted on the cold water intake pipe of the hot water tank. We recommend membrane type hydraulic safety devices with the NF mark.

During normal valve operation some drops of water are lost each time the water is heated. This apparent leak is not only normal, but is actually a sign that the valve is operating correctly.

The safety valve shall always be placed on the cold water supply pipe and no valve or tap shall be fitted between the safety valve and the tank.

In order to ensure the continuous circulation of hot water in the installation and be able to draw hot water as soon as a tap is opened, a circulation loop may be installed between the drawing points and the tank recirculation tube. A non return valve shall be fitted on this loop.

53 EXAMPLE OF INSTALLATION

9. Stop valve
17. Drain valve
27. Non-return valve
28. Cold water inlet
29. Pressure reducer
30. Safety unit set to 7 bars
- **a.** Cold water inlet including a non-return valve
- **b.** Connection to the calorifier cold water inlet
- **c.** Stop valve
- **d.** Safety valve and manual drain
- **e.** Drain orifice

32. Domestic hot water loop pump (optional)
54. YA type pressure change (health regulations)
56. Return circulation loop
57. Domestic hot water outlet.

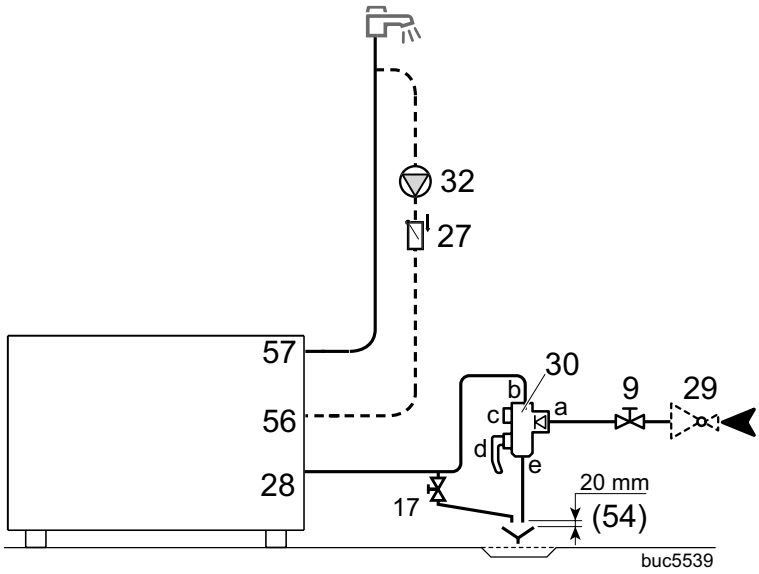

54 PACKAGING

The following table shows the box numbers included with the boiler to be installed.

Boiler	GTE 4/160	GTE 5/160	GTE 5/250	GTE 6/160	GTE 6/250	
Boiler body	FM 2	FM 3	FM 3	FM 4	FM 4	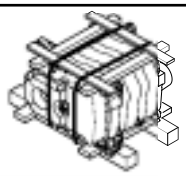
Jacket and Insulation	FM 11	FM 12	FM 12	FM 13	FM 13	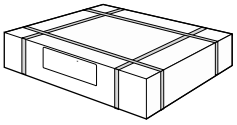
Control Panel	FM 15	FM 15	FM 15	FM 15	FM 15	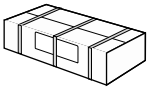
Domestic Hot Water Sensor	FM 45	FM 45	FM 45	FM 45	FM 45	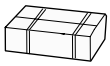
Domestic Hot Water Calorifier - L160 or - L250	BH 72 -	BH 72 -	- BH 74	BH 72 -	- BH 74	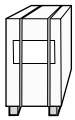
Hydraulic Connection Kit Boiler/Tank	BH 73 -	BH 73 -	- BH 75	BH 73 -	- BH 75	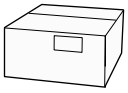

buc5540

55 INSTALLING THE FEET

- Screw the 4 adjustable feet (delivered in the hot water calorifier instruction pack) on the bottom of the tank.

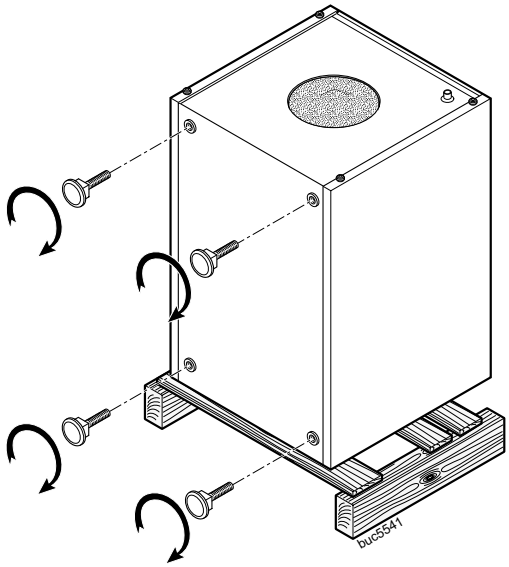

56 LEVELLING THE TANK

- Level the tank by adjusting its feet.

Basic height 35mm, adjustment range 35-45mm.

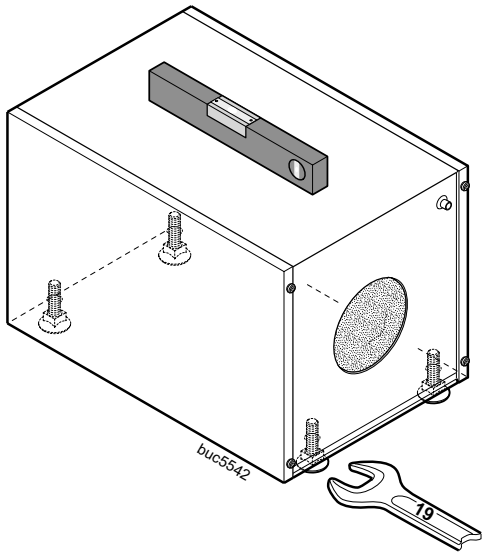

57 ASSEMBLING THE BOILER ON THE HOT WATER CALORIFIER

- Locate the boiler on top of the hot water calorifier, ensuring accuracy of dimension P at the front.
- The boiler can be lifted using two 3/4" tubes placed as shown.
- Screw the adjustable boiler feet all the way in to the minimum position (18mm).

Boiler Model	GTE 4/L160 GTE 5/L160 - L250 GTE 6/L250	GTE 6/L160
P (mm)	256	136

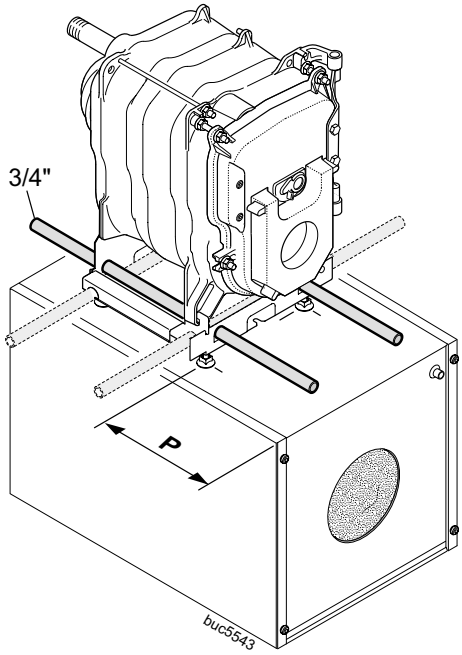

COMBINATION BOILERS

58 INSTALLING THE DOMESTIC HOT WATER PROBE

1. Remove the front panel of the hot water calorifier.
2. Insert the sensor cable into the duct of the domestic hot water calorifier.*
3. Insert the domestic hot water sensor in the attachment lug provided for it on the tank inspection plate.*

   Make the electrical connection in accordance with the instructions for the control panel.
4. Put the thermal insulation for the plate into place sliding it between the anode earthing wire and the plate.
5. Attach the front panel of the hot water calorifier.

* If the DHW kit is being fitted to a remotely located calorifier the sensor head may be extended using suitable cable.

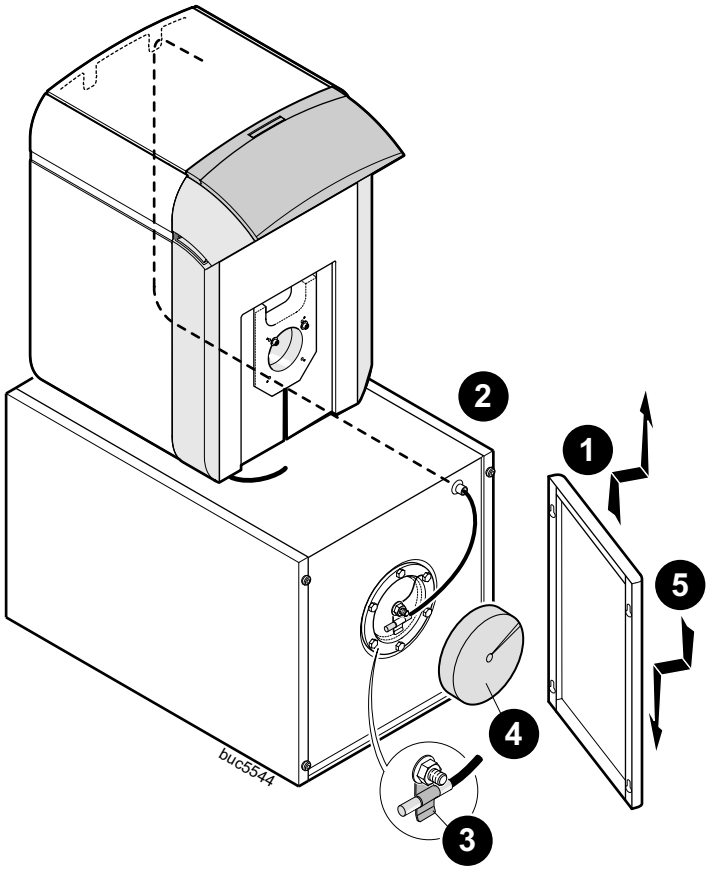

COMBINATION BOILERS

59 INTER CONNECTING PIPEWORK COMPONENTS

1. Pump
2. Flexible connections
3. Automtic air vent
4. Adaptor
5. Adaptor elbow
6. Plugs
7. Pump adaptor elbow
8. Washers
9. Caps
10. Special flow and return adaptors

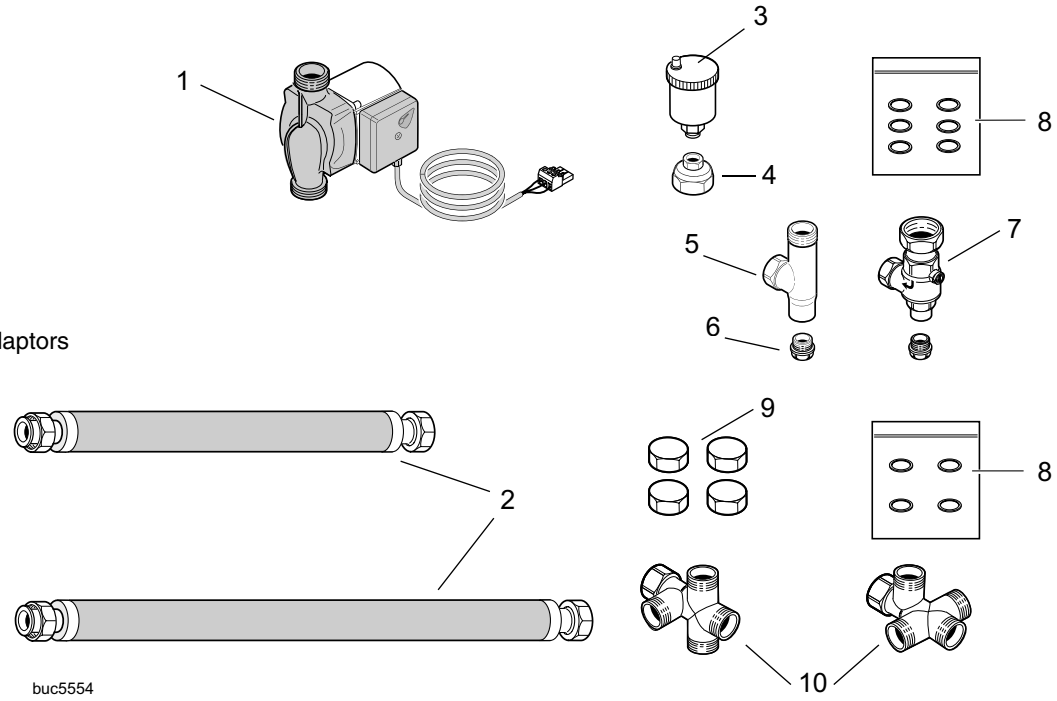

60 ASSEMBLY (FITTINGS)

1. Fit one of the special adapters to the boiler flow pipe.
2. Fit the other special adapter to the boiler return pipe.
3. Fit the special pump adapter elbow to the tank return pipe.
4. Fit the other adapter elbow to the tank flow pipe.
5. Plug or fit drain cocks to the bottom outlets at the tank adaptors.

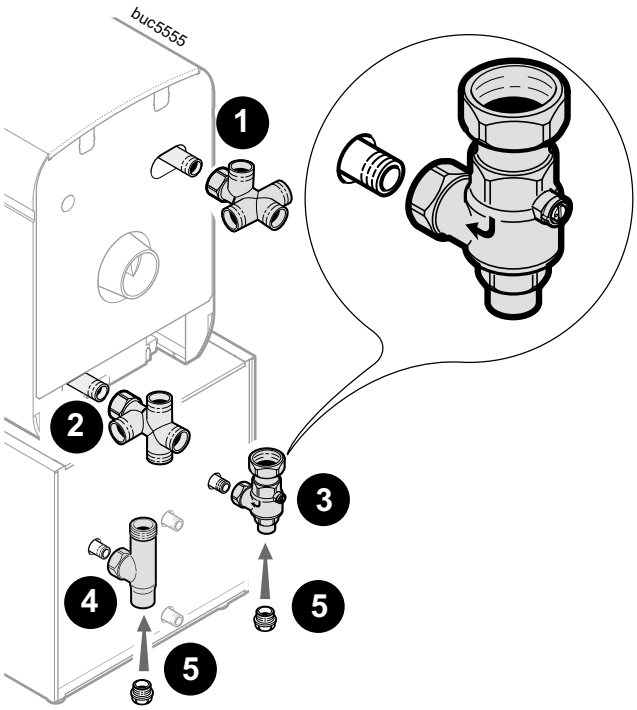

61 ASSEMBLY (PUMP AND PIPEWORK)

1. Fit the pump to the tank adaptor (ensure access to speed control and vent screw).
2. Fit the flexible pipe from the boiler flow adaptor to the pump.
3. Fit the flexible pipe from the tank adaptor to the boiler return adaptor.
4. Fit the air vent.

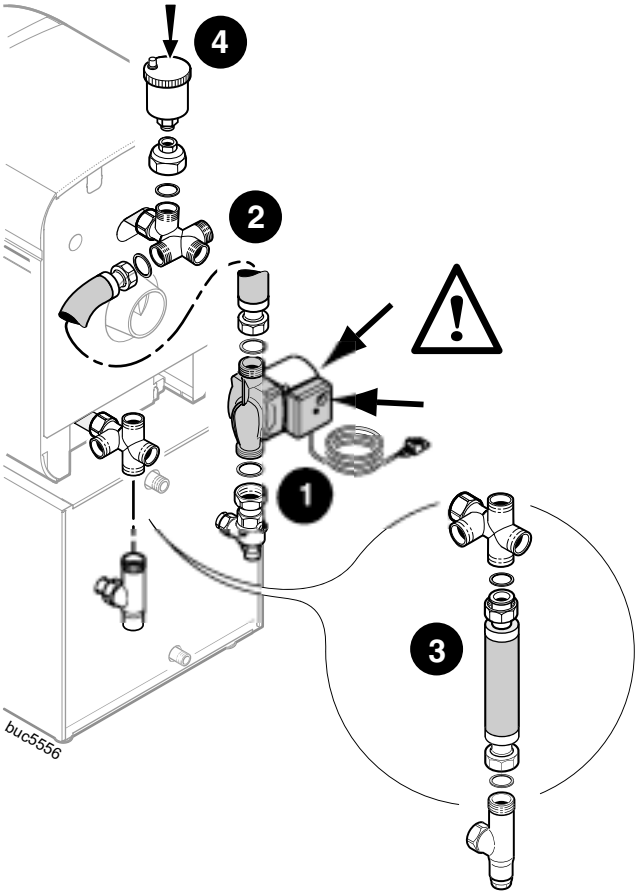

COMBINATION BOILERS

62 FINAL CONNECTIONS

1. Fit caps to any unused outlets on the special boiler flow and return adapters.
2. Route the pump electrical lead into the control panel and make the connection to the appropriate terminal block.

WARNING. Ensure that the flexible pipes are routed to ensure that no air locks can occur.

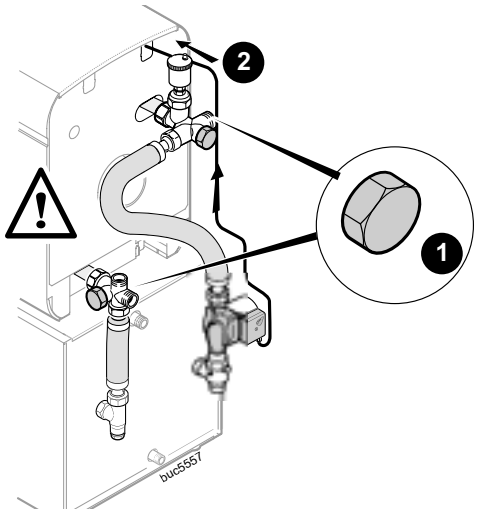

63 START UP

Domestic Hot Water Heating Circuit (Primary Circuit)

When the primary circuit has been filled and bled and its tightness has been checked in accordance with the boiler assembly instructions.

1. Remove the automatic air vent.
2. Put the non-return valve into the open position (O).
3. Release the DHW pump if necessary. Do this by unscrewing the protection plug on the front of the pump, insert a screwdriver in the slit on the centreline of the pump and turn the spindle to the right and to the left several times.
4. Vent the Circuit. If the automatic vent algorithm is installed on the boiler, switch the boiler on and it will perform a one minute venting cycle. Repeat this operation 3 or 4 times depending on the capacity of the tank, by pressing the boiler start/stop button.

WARNING. Top up the primary circuit with water.

5. Put the non-return valve into the automatic position (A).
6. Put the automatic air vent back into place.

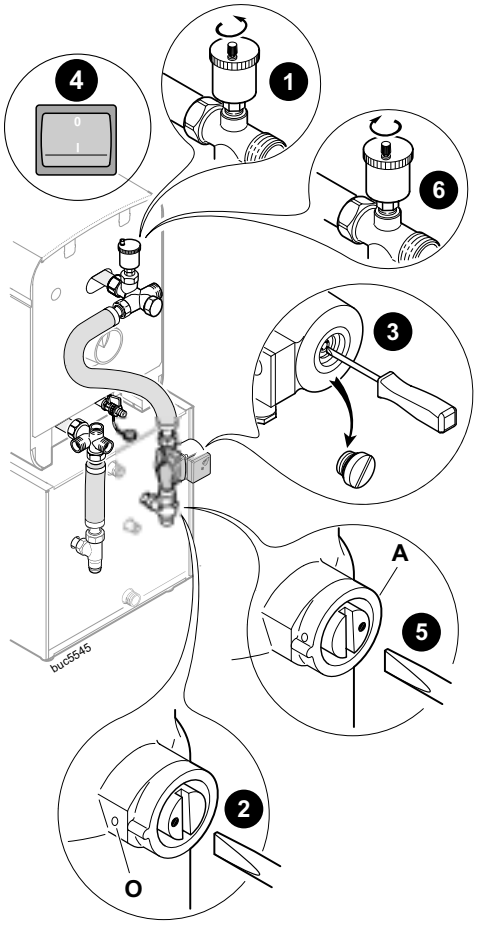

64 DOMESTIC HOT WATER CIRCUIT (SECONDARY CIRCUIT)

- Fill the calorifier through the domestic cold water inlet tube.
- Vent the domestic hot water circuit, the calorifier and the distribution network in order to prevent noise caused by trapped air moving while heating and drawing off. This is done by completely filling the water circuit and leaving a hot water tap open. Do no close this tap until the flow is smooth and there is no pipe noise. Then vent all hot water pipes in turn, opening the corresponding taps.

Note. *Allow water to flow for long enough to rinse, particularly when starting again after a prolonged stop.*

- Check the safety devices (in particular valve or safety unit) referring to the instructions provided with this component.

WARNING. When heating domestic hot water, a certain quantity of water can escape through the valve or the safety unit due to the expansion of water contained in the tank.

There is no need to worry about this feature which is absolutely normal and must in no way be hindered.

65 PERIODIC MAINTENANCE AND CHECKS

- **Safety Valve or unit:**

  IMPORTANT. The safety valve or unit must be operated periodically (at least once every month). Refer to the instructions attached to the safety valve or the safety unit. This operation eliminates any deposits that could eventually prevent the safety valve from operating correctly.

  Failure to respect this maintenance rule can result in damage to the calorifier and make the warranty null and void.

- **Descaling:**

  In some areas with hard water, it is recommended that the fitter should descale the calorifier exchanger periodically so that its performance remains high.

- **Magnesium Anode:**

  The magnesium anode must be checked at least once every 2 years. Intervals between inspections can be decided upon after the first check, depending on the state of wear of the anode.

  One of the following two methods can be used to check the anode:

  - Visual check:
    The anode must be replaced if its diameter is less than 15mm (initial diameter = 33mm).
  - Control by measurement:
    - measure the current between the tank and the anode; the anode should be replaced if the measured current is less than 0.1mA.

  Refer to Frame 66 if the anode has to be replaced.

- **Calorifier Cladding**

The calorifier cladding can be cleaned with soapy water.

66 OPERATIONS TO BE CARRIED OUT FOR DESCALING, VISUAL INSPECTION OR TO REPLACE THE MAGNESIUM ANODE

- Shut off the domestic cold water supply and empty the calorifier. Put the unit into the drain position before starting to drain the safety unit, and open a hot water tap to allow air to enter.
- Lift up the front panel to remove it.
- Remove the sensor.
- Remove the inspection flange (13mm spanner).
- Replace the anode if necessary.
- Remove sludge or scale deposited in the bottom of the reservoir.

This sludge and scale should be removed from the exchanger to maintain its performances.

- Put the inspection trap back into place making sure that the sensor attachment tab is facing downwards.
  - put the lip seal back into place and position it in the inspection orifice taking care that the tab of the inspection orifice is facing the outside of the calorifier.
  - position the retaining ring around the seal, taking care to place the tab above the retaining ring.
  - refit the flange using the 6 screws, tightening uniformly crosswise.

WARNING. The inspection flange screws must not be over tightened: 8Nm ± 1 : use a torque wrench. Note: approximately 6Nm can be obtained by holding the pipe wrench with the short lever.

- Check the water tightness of the calorifier after reassembly.
- Start up again in accordance with an instructions in Frame 64.

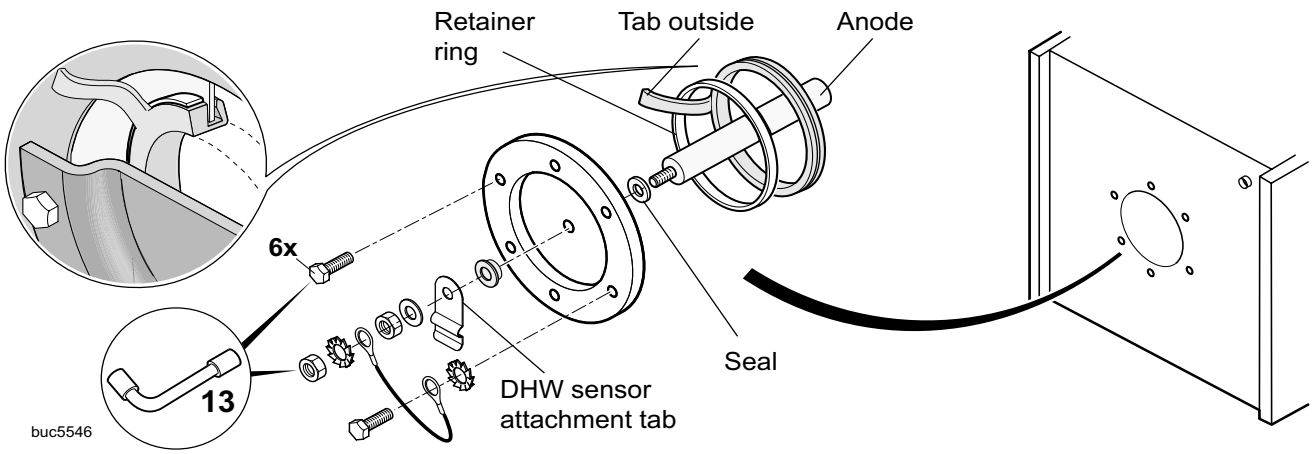

COMBINATION BOILERS

NOTES

NOTES

back

Technical Training

The Ideal Boilers Technical Training Centre offers a series of first class training courses for domestic, commercial and industrial heating installers, engineers and system specifiers. For details of courses please ring: 01482 498 432

Ideal Boilers, P.O. Box 103, National Ave, Kingston upon Hull, HU5 4JN. Telephone: 01482 492 251 Fax: 01482 448 858. Registration No. London 322 137.

Caradon Ideal Limited pursues a policy of continuing improvement in the design and performance of its products. The right is therefore reserved to vary specification without notice.

BOILERS Ideal

ENGINEERED FOR PEACE OF MIND

August 2002 UIN 159 180 A01

Caradon

Ideal Limited

Ideal Installer/Technical Helpline: 01482 498 376

www.idealboilers.com